Service Manual

"X" SERIES
9K - 12K *115V AND 208/230V INVERTER-DRIVEN AIR CONDITIONING UNITS*

Type	Model
INDOOR UNITS 115V	DHX09NWB11S DCX09NWB11S DHX12NWB11S DCX12NWB11S

Type	Model
INDOOR UNITS 208/230V	DHX09NWB21S DCX09NWB21S DHX12NWB21S DCX12NWB21S

Type	Model
OUTDOOR UNITS 115V	DHX09CSB11S DCX09CSB11S DHX12CSB11S DCX12CSB11S

Type	Model
OUTDOOR UNITS 208/230V	DHX09CSB21S DCX09CSB21S DHX12CSB21S DCX12CSB21S

IMPORTANT:

PLEASE READ AND UNDERSTAND THIS MANUAL BEFORE USING THIS INVERTER-DRIVEN AIR CONDITIONING UNIT. KEEP THIS MANUAL FOR FUTURE REFERENCE.

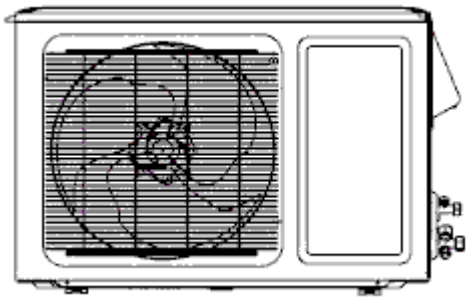

Important Notice

- Johnson Controls, Inc. pursues a policy of continuing improvement in design and performance in its products. As such, Johnson Controls, Inc. reserves the right to make changes at any time without prior notice.
- Johnson Controls, Inc. cannot anticipate every possible circumstance that might involve a potential hazard.
- This inverter air conditioning unit is designed for standard air conditioning applications only. Do not use this unit for anything other than the purposes for which it was intended for.
- The installer and system specialist shall safeguard against leakage in accordance with local pipefitter and electrical codes. The following standards may be applicable, if local regulations are not available. International Organization for Standardization: (ISO 5149 or European Standard, EN 378). No part of this manual may be reproduced in any way without the expressed written consent of Johnson Controls, Inc.
- This inverter-driven (cooling or heat pump) air conditioning unit will be operated and serviced in the United States of America and comes with all required Safety, Danger, and Caution, warnings.
- If you have questions, please contact your distributor or dealer.
- This manual provides common descriptions, basic and advanced information to maintain and service this inverter-driven (cooling or heat pump) air conditioning unit which you operate, as well for other models.
- This inverter-driven (cooling or heat pump) air conditioning unit has been designed for a specific temperature range. For optimum performance and long life, operate this unit within range limits.
- This manual should be considered as a permanent part of the air conditioning equipment and should remain with the air conditioning equipment.

Product Inspection upon Arrival

1. Upon receiving this product, inspect it for any damages incurred in transit. Claims for damage, either apparent or concealed, should be filed immediately with the shipping company.
2. Check the model number, electrical characteristics (power supply, voltage, and frequency rating), and any accessories to determine if they agree with the purchase order.
3. The standard utilization for this unit is explained in these instructions. Use of this equipment for purposes other than what it designed for is not recommended.
4. Please contact your local agent or contractor as any issues involving installation, performance, or maintenance arise. Liability does not cover defects originating from unauthorized modifications performed by a customer without the written consent of Johnson Controls, Inc. Performing any mechanical alterations on this product without the consent of the manufacturer will render your warranty null and void.

Table of Contents

Safety Summary i

1. Models 1

2. Specifications 2

2.1 Specification Sheet 2

2.2 Operation Characteristic Curve 10

2.3 Capacity Variation Ratio According to Temperature 10

2.4 Cooling and Heating Data Sheet in Rated Frequency 11

2.5 Noise Curve 11

3. Outline Dimension Diagram 13

3.1 Indoor Unit 13

3.2 Outdoor Unit 14

4. Refrigerant System Diagram 15

5. Electrical Parts 17

5.1 Wiring Diagram 17

5.2 PCB Printed Diagram 21

6. Functions and Control 24

6.1 Remote Controller Introduction 24

6.2 Brief Description of Modes and Functions 28

7. Wired Zone Controller 37

7.1 LCD Display 37

7.2 Description of LCD Display 37

8. Maintenance 47

8.1 Precautions before Maintenance 48

8.2 Error Code List 48

8.3 Troubleshooting for Main Malfunction 49

8.4 Troubleshooting for Normal Malfunction 62

9. Removal Procedures 64

9.1 Removal Procedures of Indoor Unit 64

9.2 Removal Procedures of Outdoor Unit 69

Table of Contents (con't)

Appendix 73
Appendix 1: Reference Sheet of Celsius and Fahrenheit 73
Appendix 2: Configuration of Connection Pipe 73
Appendix 3: Pipe Flaring Method 74
Appendix 4: List of Resistance for Temperature Sensor 75
Customer Service/Technical Support 78

1. Introduction

This manual concentrates on inverter-driven cooling or heat pump air conditioning units. Read this manual carefully before installation.

This manual should be considered as a permanent part of the air conditioning equipment and should remain with the air conditioning equipment.

2. Important Safety Instructions

Safety Messages

WARNING	Indicates a hazardous situation that, if not avoided, could result in death or serious injury.
CAUTION	Indicates a hazardous situation that, if not avoided, could result in minor or moderate injury.
NOTICE	Indicates information considered important, but not hazard-related (for example, messages relating to property damage).

General Precautions

WARNING	To reduce the risk of serious injury or death, read these instructions thoroughly and follow all warnings or cautions included in all manuals that accompanied the product and are attached to the unit. *Refer back to these safety instructions as needed.*

- This system should be installed by personnel certified by Johnson Controls, Inc. Personnel must be qualified according to local, state and national building and safety codes and regulations. Incorrect installation could cause leaks, electric shock, fire or explosion. In areas where Seismic ‘’Performance requirements are specified, the appropriate measures should be taken during installation to guard against possible damage or injury that might occur in an earthquake if the unit is not installed correctly, injuries may occur due to a falling unit.
- Use appropriate Personal Protective Equipment (PPE), such as gloves and protective goggles and, where appropriate, have a gas mask nearby. Also use electrical protection equipment and tools suited for electrical operation purposes. Keep a quenching cloth and a fire extinguisher nearby during brazing. Use care in handling, rigging, and setting of bulky equipment.
- When transporting, be careful when picking up, moving and mounting these units. Although the unit may be packed using plastic straps, do not use them for transporting the unit from one location to another. Do not stand on or put any material on the unit. Get a partner to help, and bend with your knees when lifting to reduce strain on your back. Sharp edges or thin aluminum fins on the air conditioner can cut fingers, so wear protective gloves.
- Do not touch or adjust any safety devices inside the indoor or outdoor units. All safety features, disengagement, and interlocks must be in place and functioning correctly before the equipment is put into operation. If these devices are improperly adjusted or tampered with in any way, a serious accident can occur. Never bypass or jump-out any safety device or switch.
- Johnson Controls, Inc. will not assume any liability for injuries or damage caused by not following steps outlined or described in this manual. Unauthorized modifications to Johnson Controls products are prohibited as they…
  - May create hazards which could result in death, serious injury or equipment damage.
  - Will void product warranties.
  - May invalidate product regulatory certifications.
  - May violate OSHA standards.

NOTICE	Take the following precautions to reduce the risk of property damage.

- Be careful that moisture, dust, or variant refrigerant compounds not enter the refrigerant cycle during installation work. Foreign matter could damage internal components or cause blockages.
- If air filters are required on this unit, do not operate the unit without the air filter set in place. If the air filter is not installed, dust may accumulate and breakdown may result.
- Do not install this unit in any place where silicon gases can coalesce. If the silicon gas molecules attach themselves to the surface of the heat exchanger, the finned surfaces will repel water. As a result, any amount of condensate can overflow from the condensate pan and could run inside of the electrical box, possibly causing electrical failures.
- When installing the unit in a hospital or other facility where electromagnetic waves are generated from nearby medical and/or electronic devices, be prepared for noise and electronic interference Electromagnetic Interference (EMI). Do not install where the waves can directly radiate into the electrical box, controller cable, or controller. Inverters, appliances, high-frequency medical equipment, and radio communications equipment may cause the unit to malfunction. The operation of the unit may also adversely affect these same devices. Install the unit at least 10 ft. (approximately 3m) away from such devices.
- When a wireless zone controller is used, locate at a distance of at least 3.3 ft. (approximately 1 meter) between the indoor unit and electric lighting. If not, the receiver part of the unit may have difficulty receiving operation commands.
- Do not install the unit in any location where animals and plants can come into direct contact with the outlet air stream. Exposure could adversely affect the animals and plants.
- Do not install the unit with any downward slope to the side of the drain boss. If you do, you may have water flowing back which may cause leaks.
- Be sure the condensate hose discharges water properly. If connected incorrectly, it may cause leaks.
- Do not install the unit in any place where oil can seep onto the units, such as table or seating areas in restaurants, and so forth. For these locations or social venues, use specialized units with oil-resistant features built into them. In addition, use a specialized ceiling fan designed for restaurant use. These specialized oil-resistant units can be ordered for such applications. However, in places where large quantities of oil can splash onto the unit, such as a factory, even the specialized units cannot be used. These products should not be installed in such locations.

Installation Precautions

WARNING	To reduce the risk of serious injury or death, the following installation precautions must be followed.

- When installing the unit into…
  - A wall: Make sure the wall is strong enough to hold the unit's weight. It may be necessary to construct a strong wood or metal frame to provide added support.
  - A room: Properly insulate any refrigerant tubing run inside a room to prevent "sweating" that can cause dripping and water damage to wall and floors.
  - Damp or uneven areas: Use a raised concrete pad or concrete blocks to provide a solid, level foundation for the unit to prevent water damage and abnormal vibration.
  - An area with high winds: Securely anchor the outdoor unit down with bolts and a metal frame. Provide a suitable air baffle.
  - A snowy area (only for heat pump model): Install the outdoor unit on a raised platform that is higher than drifting snow. Provide snow vents.
- Do not install the unit in the following places. Doing so can result in an explosion, fire, deformation, corrosion, or product failure.
  - Explosive or flammable atmosphere
  - Where fire, oil, steam, or powder can directly enter the unit, such as in close proximity or directly above a kitchen stove.
  - Where oil (including machinery oil) may be present.
  - Where corrosive gases such as chlorine, bromine, or sulfide can accumulate, such as near a hot tub or hot spring.
  - Where dense, salt-laden airflow is heavy, such as in coastal regions.
  - Where the air quality is of high acidity.
  - Where harmful gases can be generated from decomposition.

- Do not position the condensate pipe for the indoor unit near any sanitary sewers where corrosive gases may be present. If you do, toxic gases can seep into breathable air spaces and can cause respiratory injuries. If the condensate pipe is installed incorrectly, water leakage and damage to the ceiling, floor, furniture, or other possessions may result. If condensate piping becomes clogged, moisture can back up and can drip from the indoor unit. Do not install the indoor unit where such dripping can cause moisture damage or uneven locations: Use a raised concrete pad or concrete blocks to provide a solid, level foundation for the unit to prevent water damage and abnormal vibration.
- Before performing any brazing work, be sure that there are no flammable materials or open flames nearby.
- Perform a run test to ensure normal operation. Safety guards, shields, barriers, covers, and protective devices must be in place while the compressor/unit is operating. During the test run, keep fingers and clothing away from any moving parts.
- Clean up the site when finished, remembering to check that no metal scraps or bits of wiring have been left inside the unit being installed.
- During transportation, do not allow the backrest of the forklift to make contact with the unit, otherwise, it may cause damage to the heat exchanger and also may cause injury when stopped or started suddenly.
- Remove gas inside the closing pipe when the brazing work is performed. If the brazing filler metal is melted with remaining gas inside, the pipes will be blown off and it may cause injury.
- Be sure to use nitrogen gas for an airtight test. If other gases such as oxygen gas, acetylene gas or fluorocarbon gas are accidentally used, it may cause explosion or gas intoxication.

After installation work for the system has been completed, explain the “Safety Precautions,” the proper use and maintenance of the unit to the customer according to the information in all manuals that came with the system. All manuals and warranty information must be given to the user or left near the Indoor Unit.

Refrigerant Precautions

WARNING	To reduce the risk of serious injury or death, the following refrigerant precautions must be followed.

- As originally manufactured, this unit contains refrigerant installed by Johnson Controls. Johnson Controls uses only refrigerants that have been approved for use in the unit’s intended home country or market. Johnson Controls distributors similarly are only authorized to provide refrigerants that have been approved for use in the countries or markets they serve. The refrigerant used in this unit is identified on the unit’s faceplate and/or in the associated manuals. Any additions of refrigerant into this unit must comply with the country’s requirements with regard to refrigerant use and should be obtained from Johnson Controls distributors. Use of any non-approved refrigerant substitutes will void the warranty and will increase the potential risk of injury or death.
- If installed in a small room, take measures to prevent the refrigerant from exceeding the maximum allowable concentration in the event that refrigerant gases should escape. Refrigerant gases can cause asphyxiation (0.42 kg/m3 based on ISO 5149 for R410A). Consult with your distributor for countermeasures (ventilation system and so on). If refrigerant gas has leaked during the installation work, ventilate the room immediately.
- The design pressure for this product is 601 psi (4.15MPa). The pressure of R410A refrigerant is 1.4 times higher than that of the refrigerant R22. Therefore, the refrigerant piping for R410A shall be thicker than that for R22. Make sure to use the specified refrigerant piping. If not, the refrigerant piping may rupture due to an excessive refrigerant pressure. Besides, pay attention to the piping thickness when using copper refrigerant piping. The thickness of copper refrigerant piping differs depending on its material.
- The refrigerant R410A is adopted. The refrigerant oil tends to be affected by foreign matters such as moisture, oxide film, (or fat). Perform the installation work with care to prevent moisture, dust, or different refrigerant from entering the refrigerant cycle. Foreign matter can be introduced into the cycle from such parts as expansion valve and the operation may be unavailable.
- To avoid the possibility of different refrigerant or refrigerant oil being introduced into the cycle, the sizes of the charging connections have been changed from R407C type and R22 type. It is necessary to prepare the appropriate tools before performing the installation work.
- Use refrigerant pipes and joints which are approved for use with R410A.
- A compressor/unit comprises a pressurized system. Never loosen threaded joints while the system is

under pressure and never open pressurized system parts.

- Before installation is complete, make sure that the refrigerant leak test has been performed. If refrigerant gases escape into the air, turn OFF the main switch, extinguish any open flames and contact your service contractor. Refrigerant (Fluorocarbon) for this unit is odorless. If the refrigerant should leak and come into contact with open flames, toxic gas could be generated. Also, because the fluorocarbons are heavier than air, they settle to the floor, which could cause asphyxiation.
- When installing the unit, and connecting refrigerant piping, keep all piping runs as short as possible, and make sure to securely connect the refrigerant piping before the compressor starts operating. If the refrigerant piping is not connected and the compressor activates with the stop valve opened, the refrigerant cycle will become subjected to extremely high pressure, which can cause an explosion or fire.
- Tighten the flare nut with a torque wrench in the specified manner. Do not apply excessive force to the flare nut when tightening. If you do, the flare nut can crack and refrigerant leakage may occur.
- When maintaining, relocating, and disposing of the unit, dismantle the refrigerant piping after the compressor stops.
- When pipes are removed out from under the piping cover, after the insulation work is completed, cover the gap between the piping cover and pipes by a packing (field-supplied). If the gap is not covered, the unit may be damaged if snow, rain water or small animals enter the unit.
- Do not apply an excessive force to the spindle valve at the end of opening. Otherwise, the spindle valve flies out due to refrigerant pressure. At the run test, fully open the gas and liquid valves, otherwise, these devices will be damaged. (It is closed before shipment.)
- If the arrangement for outdoor units is incorrect, it may cause flowback of the refrigerant and result in failure of the outdoor unit.
- The refrigerant system may be damaged if the slope of the piping connection kit exceeds $\pm 15^{\circ}$.

Electrical Precautions

⚠WARNING	Take the following precautions to reduce the risk of electric shock, fire or explosion resulting in serious injury or death.

- Highly dangerous electrical voltages are used in this system. Carefully refer to the wiring diagram and these instructions when wiring. Improper connections and inadequate grounding can cause serious injury or death.
- Perform all electrical work in strict accordance with this installation and maintenance manual and all the relevant regulatory standards.
- Before servicing, open and tag all disconnect switches. Never assume electrical power is disconnected. Check with meter and equipment.
- Only use electrical protection equipment and tools suited for this installation.
- Use specified cables between units.
- The new air conditioner may not function normally in the following instances:

  If electrical power for the new air conditioner is supplied from the same transformer as the device* referred to below.

  If the power source cables for this device* and the new air conditioner unit are located in close proximity to each other.

  Device*: (Example): A lift, container crane, rectifier for electric railway, inverter power device, arc furnace, electric furnace, large-sized induction motor and large-sized switch.

  Regarding the cases mentioned above, surge voltage may be inducted into the power supply cables for the packaged air conditioner due to a rapid change in power consumption of the device and an activation of a switch.

  Check field regulations and standards before performing electrical work in order to protect the power supply for the new air conditioner unit.

- Communication cabling shall be a minimum of 18-Gauge, 2-Conductor, Stranded Copper. Shielded cable must be considered for applications and routing in areas of high EMI and other sources of potentially excessive electrical noise to reduce the potential for communication errors. When shielded cabling is applied, proper bonding and termination of the cable shield is required as per Johnson Controls guidelines. Plenum and riser ratings for communication cables must be considered per application and local code requirments.
- Use an exclusive power supply for the air conditioner at the unit's rated voltage.
- Be sure to install circuit breakers (ground fault interrupter, isolating switch, molded case circuit breaker and so on), with the specified capacity. Ensure that the wiring terminals are tightened securely to recommended torque specifications.
- Clamp electrical wires securely with a cable clamp after all wiring is connected to the terminal block. In addition, run wires securely through the wiring access channel.
- When installing the power lines, do not apply tension to the cables. Secure the suspended cables at regular intervals, but not too tightly.
- Make sure that the terminals do not come into contact with the surface of the electrical box. If the terminals are too close to the surface, it may lead to failures at the terminal connection.
- Turn OFF and disconnect the unit from the power source when handling the service connector. Do not open the service cover or access panel to the indoor or outdoor units without turning OFF the main power supply.
- After ceasing operation, be sure to wait at least five minutes before turning off the main power switch. Otherwise, water leakage or electrical breakdown may result. Disconnect the power source completely before attempting any maintenance for electrical parts. Check to ensure that no residual voltage is present after disconnecting the power source.
- Do not clean with, or pour water into, the controller as it could cause electric shock and/or damage the unit. Do not use strong detergent such as a solvent. Clean with a soft cloth.
- Check that the ground wire is securely connected. Do not connect ground wiring to gas piping, water piping, lighting conductor, or telephone ground wiring.
- If a circuit breaker or fuse is frequently activated, shut down the system and contact your service contractor.
- Perform all electrical work in accordance with this manual and in compliance with all regulations and safety standards.
- Do not open a service access cover or panel of an indoor or outdoor unit without first turning OFF the power at the main power supply.
- Residual voltage can cause electric shock. At all times, check for residual voltage after disconnecting from the power source before starting work on the unit.
- This equipment can be installed with a Ground Fault Circuit Breaker (GFCI), which is a recognized measure for added protection to a properly grounded unit. Install appropriate sized breakers/fuses/ overcurrent protection switches, and wiring in accordance with local, state and NEC codes and requirements. The equipment installer is responsible for understanding and abiding by applicable codes and requirements.

FModels

1. Summary

Indoor Unit 115

DHX09NWB11S
DCX09NWB11S
DHX12NWB11S
DCX12NWB11S

Indoor Unit 208// 230

DHX09NWB21S
DCX09NWB21S
DHX12NWB21S
DCX12NWB21S

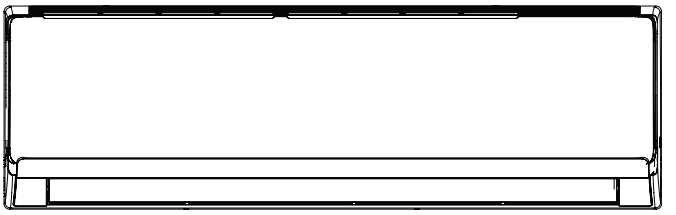

Outdoor Unit 115

DHX09CSB11S
DCX09CSB11S
DHX12CSB11S
DCX12CSB11S

Outdoor Unit 208/230

DHX09CSB11S
DCX09CSB11S
DHX12CSB11S
DCX12CSB11S

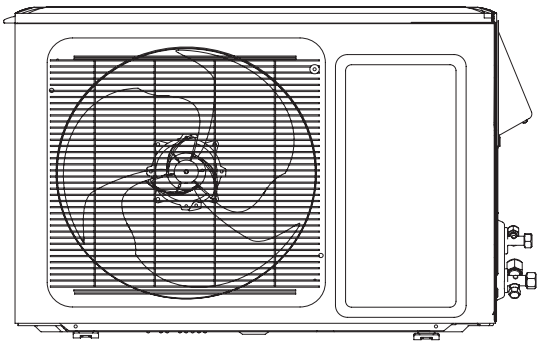

Controller

DRCPX

2. Specifications

2.1 Specification Sheet

Model			DCX09NWB11S DCX09CSB11S	DHX09NWB11S DHX09CSB11S
Power Supply	Rated Voltage	V~	115	115
	Rated Frequency	Hz	60	60
	Phases		1	1
Power Supply Mode			Outdoor	Outdoor
Cooling Capacity(Min~Max)		Btu/h	9000(2764~10918)	9000(2764~10918)
Heating Capacity(Min~Max)		Btu/h	/	9900(2081~13989)
Cooling Power Input(Min~Max)		W	700(100~1270)	700(100~1270)
Heating Power Input(Min~Max)		W	/	930(140~1200)
Cooling Power Current		A	6.21	6.21
Heating Power Current		A	/	6.21
Rated Input		W	1270	1270
Rated Current		A	11.27	11.27
Air Flow Volume(SH/H/M/L)		CFM	377/288/241/171	377/288/241/171
Dehumidifying Volume		Pint/h	1.69	1.69
EER		(Btu/h)/W	12.86	12.86
COP		(Btu/h)/W	/	10.65
SEER			23.00	23.00
HSPF			/	10.50
Application Area		yd^2	14.35-21.53	14.35-21.53
Indoor Unit	Model of indoor unit		DCX09NWB11S	DHX09NWB11S
	Fan Type		Cross-flow	Cross-flow
	Diameter Length(DXL)	inch	Φ3 6/7X25	Φ3 6/7X25
	Fan Motor Cooling Speed(SH/H/M/L)	r/min	1350/1200/1050/750	1350/1200/1050/750
	Fan Motor Heating Speed(SH/H/M/L)	r/min	/	1300/1150/1000/900
	Output of Fan Motor	W	20	20
	Fan Motor RLA	A	0.32	0.32
	Fan Motor Capacitor	μF	/	/
	Evaporator Form		Aluminum Fin-copper Tube	Aluminum Fin-copper Tube
	Pipe Diameter	inch	Φ8/29	Φ8/29
	Row-fin Gap	inch	2-1/18	2-1/18
	Coil Length (LXDXW)	inch	25X7/8X12 1/16	25X7/8X12 1/16
	Swing Motor Model		MP24BA	MP24BA
	Output of Swing Motor	W	1.5	1.5
	Fuse	A	3.15	3.15
	Sound Pressure Level(SH/H/M/L)	dB (A)	43/38/32/26	43/38/32/26
	Sound Power Level(SH/H/M/L)	dB (A)	53/48/42/36	53/48/42/36
	Dimension (WXHXD)	inch	33 1/4X11 3/8X8 2/9	33 1/4X11 3/8X8 2/9
	Dimension of Carton Box (LXWXH)	inch	36 1/7X11X14 1/3	36 1/7X11X14 1/3
	Dimension of Package (LXWXH)	inch	36 1/4X11X15	36 1/4X11X15
	Net Weight	lb	23.2	23.2
	Gross Weight	lb	27.6	27.6

Outdoor Unit	Model of Outdoor Unit		DCX09CSB11S	DCH09NWB11S
	Compressor Manufacturer/Trademark		ZHUHAI GREE DAKIN DEVICE CO.,LTD.	ZHUHAI LANDA COMPRESSOR CO.,LTD
	Compressor Model		QXA-A091zE190	QXA-A091zE190
	Compressor Oil		FVC68D or RB 68EP	FVC68D or RB 68EP
	Compressor Type		Rotary	Rotary
	Compressor Locked Rotor Amp (L.R.A)	A	/	/
	Compressor RLA	A	5.00	5.00
	Compressor Power Input	W	980	980
	Overload Protector		1NT11L-6233 or KSD115^{O}C or HPC115/95U1	1NT11L-6233 or KSD115^{O}C or HPC115/95U1
	Throttling Method		Electron expansion valve	Electron expansion valve
	Operation temp	ºF	61~86	61~86
	Ambient temp (cooling)	ºF	0~115	0~115
	Ambient temp (heating)	ºF	/	-4~75
	Condenser Form		Aluminum Fin-copper Tube	Aluminum Fin-copper Tube
	Pipe Diameter	inch	Φ3/8	Φ3/8
	Rows-fin Gap	inch	2-1/18	2-1/18
	Coil Length (LXDXW)	inch	30 2/3X1 52/71X20	30 2/3X1 52/71X20
	Fan Motor Speed	rpm	850	850
	Output of Fan Motor	W	30	30
	Fan Motor RLA	A	0.55	0.55
	Fan Motor Capacitor	μF	/	/
	Air Flow Volume of Outdoor Unit	CFM	1059	1059
	Fan Type		Axial-flow	Axial-flow
	Fan Diameter	inch	Φ15 3/4	Φ15 3/4
	Defrosting Method		/	Automatic Defrosting
	Climate Type		T1	T1
	Isolation		I	I
	Moisture Protection		IP24	IP24
	Permissible Excessive Operating Pressure for the Discharge Side	MPa	4.3	4.3
	Permissible Excessive Operating Pressure for the Suction Side	MPa	2.5	2.5
	Sound Pressure Level (H/M/L)	dB (A)	53/-/-	53/-/-
	Sound Power Level (H/M/L)	dB (A)	63/-/-	63/-/-
	Dimension (WXHXD)	inch	33 2/5X21 1/4X12 3/5	33 2/5X21 1/4X12 3/5
	Dimension of Carton Box (LXWXH)	inch	34 4/7X14 1/6X22 5/6	34 4/7X14 1/6X22 5/6
	Dimension of Package (LXWXH)	inch	34 2/3X14 2/7X23 3/7	34 2/3X14 2/7X23 3/7
	Net Weight	lb	62.8	71.7
	Gross Weight	lb	68.4	77.2
	Refrigerant		R410A	R410A
	Refrigerant Charge	oz	42.3	42.3
Connection Pipe	Length	ft	24.6	24.6
	Gas Additional Charge	oz/ft	0.2	0.2
	Outer Diameter Liquid Pipe	inch	Φ1/4	Φ1/4
	Outer Diameter Gas Pipe	inch	Φ3/8	Φ3/8
	Max Distance Height	ft	32.8	32.8
	Max Distance Length	ft	49.2	49.2
	Note:The connection pipe applies metric diameter.			

The above data is subject to change without notice. Please refer to the nameplate of the unit.

Model			DCX12NWB11S DCX12CSB11S	DHX12NWB11S DHX12CSB11S
Power Supply	Rated Voltage	V~	115	115
	Rated Frequency	Hz	60	60
	Phases		1	1
Power Supply Mode			Outdoor	Outdoor
Cooling Capacity(Min~Max)		Btu/h	12000(3514~14569)	12000(3514~14569)
Heating Capacity(Min~Max)		Btu/h	/	12000(2764~16582)
Cooling Power Input(Min~Max)		W	923(170~1300)	960(170~1300)
Heating Power Input(Min~Max)		W	/	990(170~1350)
Cooling Power Current		A	8.78	8.78
Heating Power Current		A	/	8.78
Rated Input		W	1300	1350
Rated Current		A	11.54	11.98
Air Flow Volume(SH/H/M/L)		CFM	400/288/241/171	400/288/241/171
Dehumidifying Volume		Pint/h	2.96	2.96
EER		(Btu/h)/W	13.00	12.50
COP		(Btu/h)/W	/	12.32
SEER			22	22.00
HSPF			/	10.20
Application Area		yd^2	19.14-28.70	19.14-28.70
Indoor Unit	Model of indoor unit		DCX12NWB11S	DHX12NWB11S
	Fan Type		Cross-flow	Cross-flow
	Diameter Length(DXL)	inch	Φ3 6/7X25	Φ3 6/7X25
	Fan Motor Cooling Speed(SH/H/M/L)	r/min	1400/1200/1050/800	1400/1200/1050/800
	Fan Motor Heating Speed(SH/H/M/L)	r/min	/	1400/1200/1000/900
	Output of Fan Motor	W	40	40
	Fan Motor RLA	A	0.32	0.32
	Fan Motor Capacitor	μF	/	/
	Evaporator Form		Aluminum Fin-copper Tube	Aluminum Fin-copper Tube
	Pipe Diameter	inch	Φ8/29	Φ8/29
	Row-fin Gap	inch	2-1/18	2-1/18
	Coil Length (LXDXW)	inch	25X7/8X12 1/16	25X7/8X12 1/16
	Swing Motor Model		MP24BA	MP24BA
	Output of Swing Motor	W	1.5	1.5
	Fuse	A	3.15	3.15
	Sound Pressure Level(SH/H/M/L)	dB (A)	45/40/34/28	45/40/34/28
	Sound Power Level(SH/H/M/L)	dB (A)	55/50/44/38	55/50/44/38
	Dimension (WXHXD)	inch	33 1/4X11 3/8X8 2/9	33 1/4X11 3/8X8 2/9
	Dimension of Carton Box (LXWXH)	inch	36 1/7X11X14 1/3	36 1/7X11X14 1/3
	Dimension of Package (LXWXH)	inch	36 1/4X11X15	36 1/4X11X15
	Net Weight	lb	23.2	23.2
	Gross Weight	lb	27.6	27.6

Outdoor Unit	Model of Outdoor Unit		DCX12CSB11S	DHX12CSB11S
	Compressor Manufacturer/Trademark		ZHUHAI GREE DAKIN DEVICE CO.,LTD.	ZHUHAI LANDA COMPRESSOR CO.,LTD
	Compressor Model		QXA-A091zE190	QXA-A091zE190
	Compressor Oil		FVC68D or RB 68EP	FVC68D or RB 68EP
	Compressor Type		Rotary	Rotary
	Compressor Locked Rotor Amp (L.R.A)	A	/	/
	Compressor RLA	A	5.00	5.00
	Compressor Power Input	W	980	980
	Overload Protector		1NT11L-6233 or KSD115°C or HPC115/95U1	1NT11L-6233 or KSD115°C or HPC115/95U1
	Throttling Method		Electron expansion valve	Electron expansion valve
	Operation temp	ºF	61~86	61~86
	Ambient temp (cooling)	ºF	0~115	0~115
	Ambient temp (heating)	ºF	/	-4~75
	Condenser Form		Aluminum Fin-copper Tube	Aluminum Fin-copper Tube
	Pipe Diameter	inch	Φ3/8	Φ3/8
	Rows-fin Gap	inch	2-1/18	2-1/18
	Coil Length (LXDXW)	inch	30 2/3X1 52/71X22	30 2/3X1 52/71X22
	Fan Motor Speed	rpm	850	850
	Output of Fan Motor	W	30	30
	Fan Motor RLA	A	0.55	0.55
	Fan Motor Capacitor	μF	/	/
	Air Flow Volume of Outdoor Unit	CFM	1177	1177
	Fan Type		Axial-flow	Axial-flow
	Fan Diameter	inch	Φ15 3/4	Φ15 3/4
	Defrosting Method		/	Automatic Defrosting
	Climate Type		T1	T1
	Isolation		I	I
	Moisture Protection		IP24	IP24
	Permissible Excessive Operating Pressure for the Discharge Side	MPa	4.3	4.3
	Permissible Excessive Operating Pressure for the Suction Side	MPa	2.5	2.5
	Sound Pressure Level (H/M/L)	dB (A)	53/-/-	53/-/-
	Sound Power Level (H/M/L)	dB (A)	63/-/-	63/-/-
	Dimension (WXHXD)	inch	33 2/5X23 1/3X12 3/5	33 2/5X23 1/3X12 3/5
	Dimension of Carton Box (LXWXH)	inch	34 4/7X14 1/6X24 4/5	34 4/7X14 1/6X24 4/5
	Dimension of Package (LXWXH)	inch	34 2/3X14 2/7X25 2/5	34 2/3X14 2/7X25 2/5
	Net Weight	lb	73.9	77.2
	Gross Weight	lb	80.5	83.8
	Refrigerant		R410A	R410A
	Refrigerant Charge	oz	47.6	47.6
Connection Pipe	Length	ft	24.6	24.6
	Gas Additional Charge	oz/ft	0.2	0.2
	Outer Diameter Liquid Pipe	inch	Φ1/4	Φ1/4
	Outer Diameter Gas Pipe	inch	Φ1/2	Φ1/2
	Max Distance Height	ft	32.8	32.8
	Max Distance Length	ft	65.6	65.6
	Note:The connection pipe applies metric diameter.			

The above data is subject to change without notice. Please refer to the nameplate of the unit.

Model			DCX09NWB21S DCX09CSB21S	DHX09NWB21S DHX09CSB21S
Power Supply	Rated Voltage	V~	208/230	208/230
	Rated Frequency	Hz	60	60
	Phases		1	1
Power Supply Mode			Outdoor	Outdoor
Cooling Capacity(Min~Max)		Btu/h	9000(3100~9600)	9000(3100~9600)
Heating Capacity(Min~Max)		Btu/h	/	11000(1911~12000)
Cooling Power Input(Min~Max)		W	630(160~1300)	630(160~1300)
Heating Power Input(Min~Max)		W	/	1020(160~1350)
Cooling Power Current		A	2.80	2.80
Heating Power Current		A	/	3.50
Rated Input		W	1300	1350
Rated Current		A	5.8	6.0
Air Flow Volume(SH/H/M/L)		CFM	377/288/241/171	377/288/241/171
Dehumidifying Volume		Pint/h	1.69	1.69
EER		(Btu/h)/W	14.29	14.29
COP		(Btu/h)/W	/	10.78
SEER			23.00	23.00
HSPF			/	10.50
Application Area		yd^2	14.35-21.53	14.35-21.53
Indoor Unit	Model of indoor unit		DCX09NWB21S	DHX09NWB21S
	Fan Type		Cross-flow	Cross-flow
	Diameter Length(DXL)	inch	Φ3 6/7X25	Φ3 6/7X25
	Fan Motor Cooling Speed(SH/H/M/L)	r/min	1350/1200/1050/750	1350/1200/1050/750
	Fan Motor Heating Speed(SH/H//M/L)	r/min	/	1300/1150/1000/900
	Output of Fan Motor	W	20	20
	Fan Motor RLA	A	0.09	0.09
	Fan Motor Capacitor	μF	/	/
	Evaporator Form		Aluminum Fin-copper Tube	Aluminum Fin-copper Tube
	Pipe Diameter	inch	Φ 2/7	Φ 2/7
	Row-fin Gap	inch	2-1/18	2-1/18
	Coil Length (LXDXW)	inch	25X7/8X12 1/16	25X7/8X12 1/16
	Swing Motor Model		MP24BA	MP24BA
	Output of Swing Motor	W	1.5	1.5
	Fuse	A	3.15	3.15
	Sound Pressure Level(SH/H/M/L)	dB (A)	43/39/35/29	43/39/35/29
	Sound Power Level(SH/H/M/L)	dB (A)	53/49/45/39	53/49/45/39
	Dimension (WXHXD)	inch	33 1/4X11 3/8X8 2/9	33 1/4X11 3/8X8 2/9
	Dimension of Carton Box (LXWXH)	inch	36 1/7X11X14 1/3	36 1/7X11X14 1/3
	Dimension of Package (LXWXH)	inch	36 1/4X11X15	36 1/4X11X15
	Net Weight	lb	22.1	22.1
	Gross Weight	lb	26.5	26.5

Outdoor Unit	Model of Outdoor Unit		DCX09CSB21S	DHX09CSB21S
	Compressor Manufacturer/Trademark		ZHUHAI GREE DAIKIN DEVICE CO.,LTD	ZHUHAI GREE DAIKIN DEVICE CO.,LTD
	Compressor Model		1GDY23AXD	1GDY23AXD
	Compressor Oil		DAPHNE FVC50K	DAPHNE FVC50K
	Compressor Type		Swing	Swing
	Compressor Locked Rotor Amp (L.R.A)	A	/	/
	Compressor RLA	A	4.00	4.00
	Compressor Power Input	W	845	845
	Overload Protector		KSD115°C or HPC115/95	KSD115°C or HPC115/95
	Throttling Method		Electron expansion valve	Electron expansion valve
	Operation temp	ºF	61~86	61~86
	Ambient temp (cooling)	ºF	0~115	0~115
	Ambient temp (heating)	ºF	/	-4~75
	Condenser Form		Aluminum Fin-copper Tube	Aluminum Fin-copper Tube
	Pipe Diameter	inch	Φ3/8	Φ3/8
	Rows-fin Gap	inch	2-7/127	2-7/127
	Coil Length (LXDXW)	inch	29 2/5X1 3/4X20	29 2/5 X1 3/4X20
	Fan Motor Speed	rpm	900	900
	Output of Fan Motor	W	30	30
	Fan Motor RLA	A	/	/
	Fan Motor Capacitor	μF	/	/
	Air Flow Volume of Outdoor Unit	CFM	1059	1059
	Fan Type		Axial-flow	Axial-flow
	Fan Diameter	inch	Φ15 3/4	Φ15 3/4
	Defrosting Method		/	Automatic Defrosting
	Climate Type		T1	T1
	Isolation		I	I
	Moisture Protection		IP24	IP24
	Permissible Excessive Operating Pressure for the Discharge Side	MPa	4.3	4.3
	Permissible Excessive Operating Pressure for the Suction Side	MPa	2.5	2.5
	Sound Pressure Level (H/M/L)	dB (A)	53/-/-	53/-/-
	Sound Power Level (H/M/L)	dB (A)	63/-/-	63/-/-
	Dimension (WXHXD)	inch	33 2/5X21 1/4X12 3/5	33 2/5X21 1/4X12 3/5
	Dimension of Carton Box (LXWXH)	inch	34 4/7X14 1/6X22 5/6	34 4/7X14 1/6X22 5/6
	Dimension of Package (LXWXH)	inch	34 2/3X14 2/7X23 3/7	34 2/3X14 2/7X23 3/7
	Net Weight	lb	72.8	78.3
	Gross Weight	lb	78.3	83.8
	Refrigerant		R410A	R410A
	Refrigerant Charge	oz	45.9	45.9
Connection Pipe	Length	ft	24.6	24.6
	Gas Additional Charge	oz/ft	0.2	0.2
	Outer Diameter Liquid Pipe	inch	Φ1/4	Φ1/4
	Outer Diameter Gas Pipe	inch	Φ3/8	Φ3/8
	Max Distance Height	ft	32.8	32.8
	Max Distance Length	ft	49.2	49.2
	Note:The connection pipe applies metric diameter.			

The above data is subject to change without notice. Please refer to the nameplate of the unit.

Model			DCX12NWB21S DCX12CSB21S	DHX12NWB21S DHX12CSB21S
Power Supply	Rated Voltage	V~	208/230	208/230
	Rated Frequency	Hz	60	60
	Phases		1	1
Power Supply Mode			Outdoor	Outdoor
Cooling Capacity(Min~Max)		Btu/h	12000(3100~13000)	12000(3100~13000)
Heating Capacity(Min~Max)		Btu/h	/	13000(2400~14000)
Cooling Power Input(Min~Max)		W	923(200~1350)	960(200~1350)
Heating Power Input(Min~Max)		W	/	1100(400~1400)
Cooling Power Current		A	4.50	4.50
Heating Power Current		A	/	5.50
Rated Input		W	1350	1400
Rated Current		A	6.0	6.3
Air Flow Volume(SH/H//M/L)		CFM	400/288/241/171	400/288/241/171
Dehumidifying Volume		Pint/h	2.96	2.96
EER		(Btu/h)/W	12.50	13.00
COP		(Btu/h)/W	/	11.82
SEER			22.00	22.00
HSPF			/	10.10
Application Area		yd^2	19.14-28.70	19.14-28.70
Indoor Unit	Model of indoor unit		DCX12NWB21S	DHX12NWB21S
	Fan Type		Cross-flow	Cross-flow
	Diameter Length(DXL)	inch	Φ3 6/7X25	Φ3 6/7X25
	Fan Motor Cooling Speed(SH/H/M/L)	r/min	1400/1200/1050/800	1400/1200/1050/800
	Fan Motor Heating Speed(SH/H/M/L)	r/min	/	1400/1200/1000/900
	Output of Fan Motor	W	20	20
	Fan Motor RLA	A	0.09	0.09
	Fan Motor Capacitor	μF	/	/
	Evaporator Form		Aluminum Fin-copper Tube	Aluminum Fin-copper Tube
	Pipe Diameter	inch	Φ2/7	Φ2/7
	Row-fin Gap	inch	2-1/18	2-1/18
	Coil Length (LXDXW)	inch	25X7/8X12 1/16	25X7/8X12 1/16
	Swing Motor Model		MP24BA	MP24BA
	Output of Swing Motor	W	1.5	1.5
	Fuse	A	3.15	3.15
	Sound Pressure Level(SH/H/M/L)	dB (A)	45/39/35/29	45/39/35/29
	Sound Power Level(SH/H/M/L)	dB (A)	55/49/45/39	55/49/45/39
	Dimension (WXHXD)	inch	33 1/4X11 3/8X8 2/9	33 1/4X11 3/8X8 2/9
	Dimension of Carton Box (LXWXH)	inch	36 1/7X11X14 1/3	36 1/7X11X14 1/3
	Dimension of Package (LXWXH)	inch	36 1/4X11X15	36 1/4X11X15
	Net Weight	lb	22.1	22.1
	Gross Weight	lb	26.5	26.5

Outdoor Unit	Model of Outdoor Unit		DCX12CSB21S	DHX12CSB21S
	Compressor Manufacturer/Trademark		ZHUHAI GREE DAIKIN DEVICE CO.,LTD	ZHUHAI GREE DAIKIN DEVICE CO.,LTD
	Compressor Model		1GDY23AXD	1GDY23AXD
	Compressor Oil		DAPHNE FVC50K	DAPHNE FVC50K
	Compressor Type		Swing	Swing
	Compressor Locked Rotor Amp (L.R.A)	A	/	/
	Compressor RLA	A	4.00	4.00
	Compressor Power Input	W	845	845
	Overload Protector		KSD115°C or HPC115/95	KSD115°C or HPC115/95
	Throttling Method		Electron expansion valve	Electron expansion valve
	Operation temp	ºF	61~86	61~86
	Ambient temp (cooling)	ºF	0~115	0~115
	Ambient temp (heating)	ºF	/	-4~75
	Condenser Form		Aluminum Fin-copper Tube	Aluminum Fin-copper Tube
	Pipe Diameter	inch	Φ3/8	Φ3/8
	Rows-fin Gap	inch	2-7/127	2-7/127
	Coil Length (LXDXW)	inch	29 2/5X1 3/4X22	29 2/5X1 3/4X22
	Fan Motor Speed	rpm	900	900
	Output of Fan Motor	W	30	30
	Fan Motor RLA	A	/	/
	Fan Motor Capacitor	μF	/	/
	Air Flow Volume of Outdoor Unit	CFM	1177	1177
	Fan Type		Axial-flow	Axial-flow
	Fan Diameter	inch	Φ15 3/4	Φ15 3/4
	Defrosting Method		/	Automatic Defrosting
	Climate Type		T1	T1
	Isolation		I	I
	Moisture Protection		IP24	IP24
	Permissible Excessive Operating Pressure for the Discharge Side	MPa	4.3	4.3
	Permissible Excessive Operating Pressure for the Suction Side	MPa	2.5	2.5
	Sound Pressure Level (H/M/L)	dB (A)	54/-/-	54/-/-
	Sound Power Level (H/M/L)	dB (A)	64/-/-	64/-/-
	Dimension (WXHXD)	inch	33 2/5X23 1/3X12 3/5	33 2/5X23 1/3X12 3/5
	Dimension of Carton Box (LXWXH)	inch	34 4/7X14 1/6X24 4/5	34 4/7X14 1/6X24 4/5
	Dimension of Package (LXWXH)	inch	34 2/3X14 2/7X25 2/5	34 2/3X14 2/7X25 2/5
	Net Weight	lb	80.5	86.0
	Gross Weight	lb	87.1	92.6
	Refrigerant		R410A	R410A
	Refrigerant Charge	oz	47.6	47.6
Connection Pipe	Length	ft	24.6	24.6
	Gas Additional Charge	oz/ft	0.2	0.2
	Outer Diameter Liquid Pipe	inch	Φ1/4	Φ1/4
	Outer Diameter Gas Pipe	inch	Φ1/2	Φ1/2
	Max Distance Height	ft	32.8	32.8
	Max Distance Length	ft	65.6	65.6
	Note:The connection pipe applies metric diameter.			

The above data is subject to change without notice. Please refer to the nameplate of the unit.

2.2 Operation Characteristic Curve

Cooling

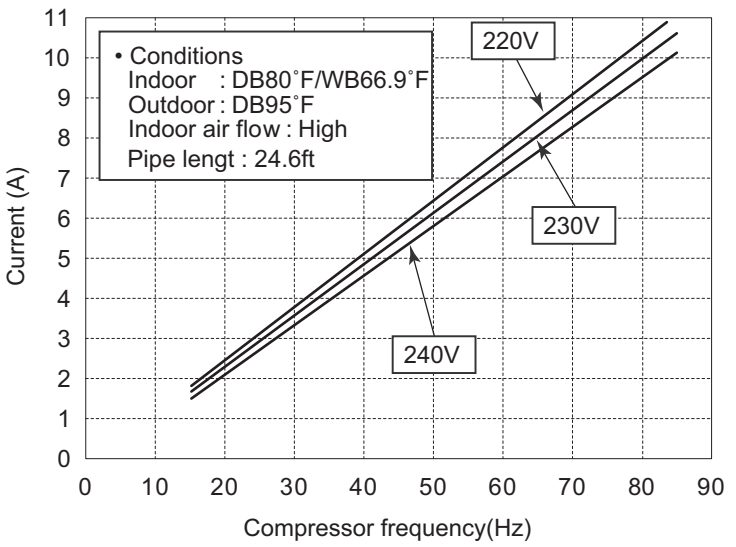

Heating

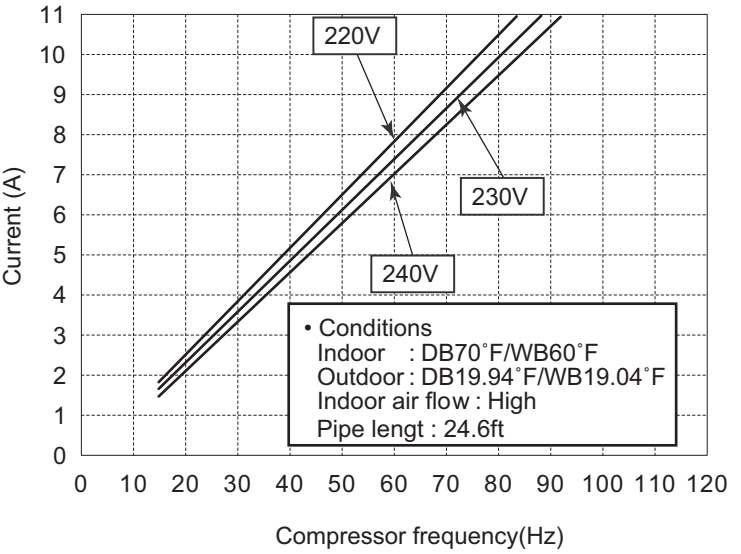

2.3 Capacity Variation Ratio According to Temperature

Cooling

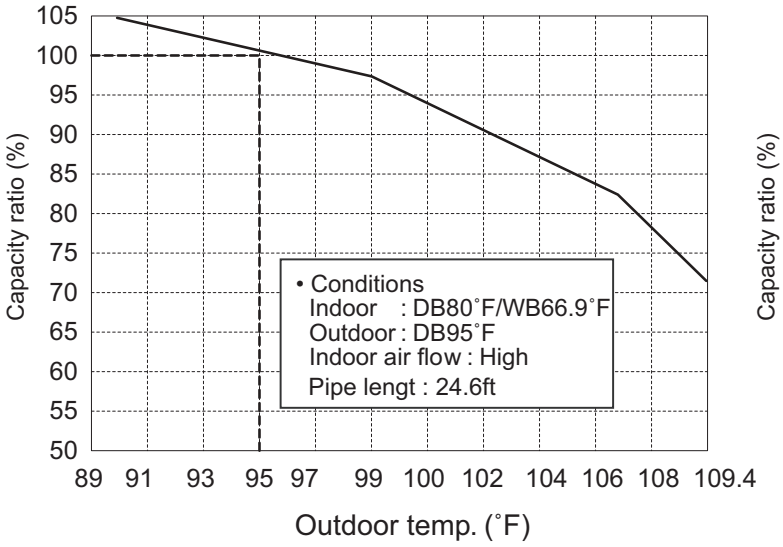

Heating

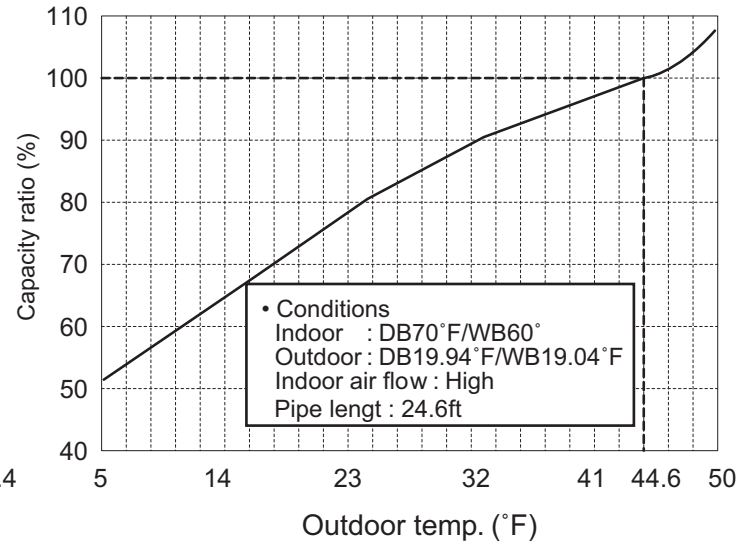

2.4 Cooling and Heating Data Sheet in Rated Frequency

Cooling:

Rated cooling condition(°F) (DB/WB)		Model	Pressure of gas pipe connecting indoor and outdoor unit	Inlet and outlet pipe temperature of heat exchanger		Fan speed of indoor unit	Fan speed of outdoor unit	Compressor revolution (rps)
Indoor	Outdoor		P (MPa)	T1 (°F)	T2 (°F)			
80/66.9	95/-	09K	0.9~1.0	in:46.4~51.8 out:51.8~57.2	in:167~181.4 out:98.6~118.4	Super High	High	52
80/66.9	95/-	12K	0.9~1.0	in:46.4~51.8 out:51.8~57.2	in:167~181.4 out:98.6~118.4	Super High	High	72

Heating:

Rated heating condition(°F) (DB/WB)		Model	Pressure of gas pipe connecting indoor and outdoor unit	Inlet and outlet pipe temperature of heat exchanger		Fan speed of indoor unit	Fan speed of outdoor unit	Compressor revolution (rps)
Indoor	Outdoor		P (MPa)	T1 (°F)	T2 (°F)			
70/60	19.94/19.04	09K	2.5~2.8	in:167~181.4 out:98.6~113	in:33.8~37.4 out:35.6~42.8	Super High	High	65
70/60	19.94/19.04	12K	2.5~2.8	in:167~181.4 out:98.6~113	in:33.8~37.4 out:35.6~42.8	Super High	High	77

Instruction:
T1: Inlet and outlet pipe temperature of evaporator
T2: Inlet and outlet pipe temperature of condenser
P: Pressure at the side of big valve
Connection pipe length: 24.6ft.

2.5 Noise Curve

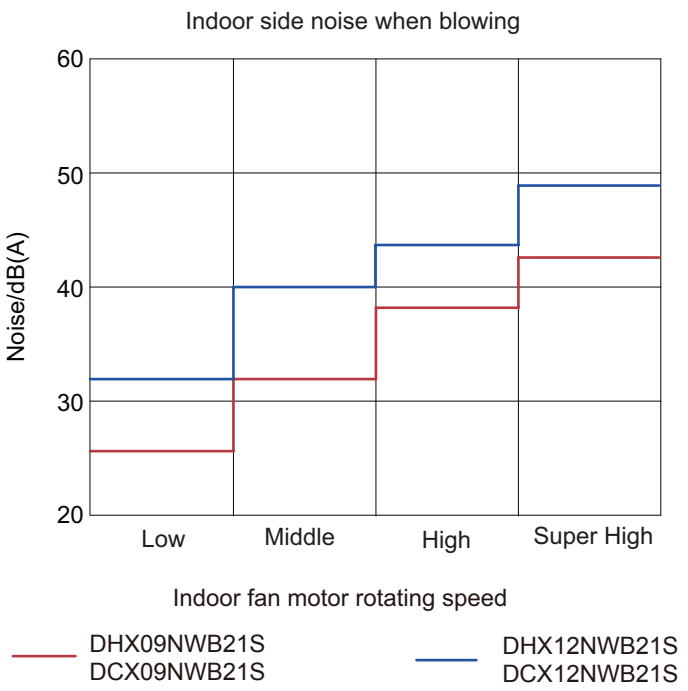

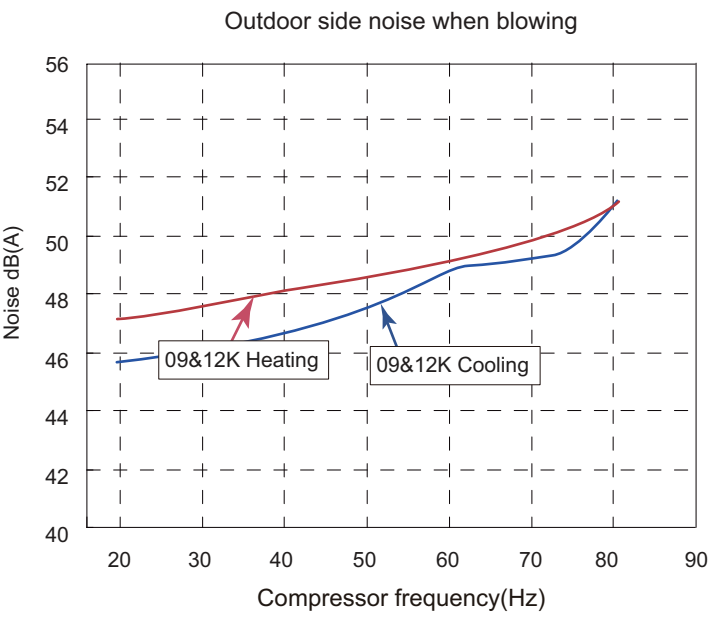

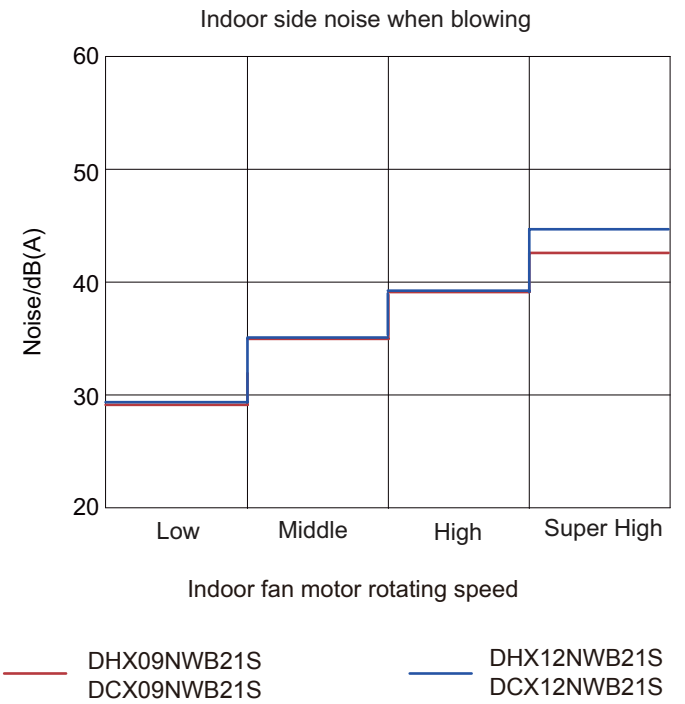
Indoor side noise when blowing
Noise/dB(A)
60
50
40
30
20
Low
Middle
High
Super High
Indoor fan motor rotating speed
DHX09NWB21S
DCX09NWB21S
DHX12NWB21S
DCX12NWB21S

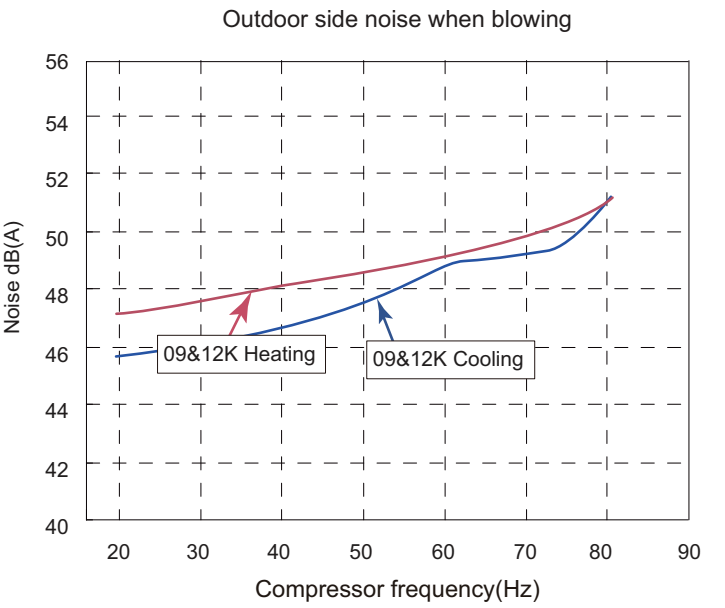
Outdoor side noise when blowing
Noise dB(A)
56
54
52
50
48
46
44
42
40
20
30
40
50
60
70
80
90
09&12K Heating
09&12K Cooling
Compressor frequency(Hz)

3. Outline Dimension Diagram

3.1 Indoor Unit

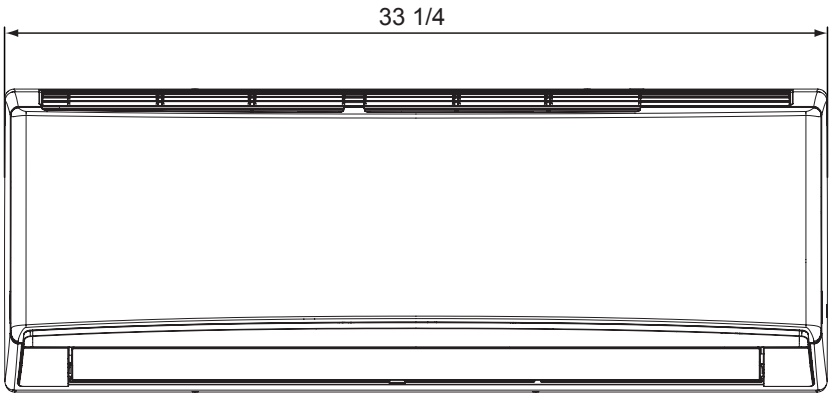

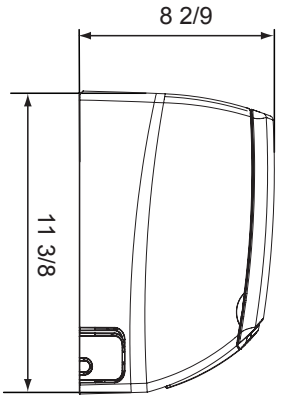

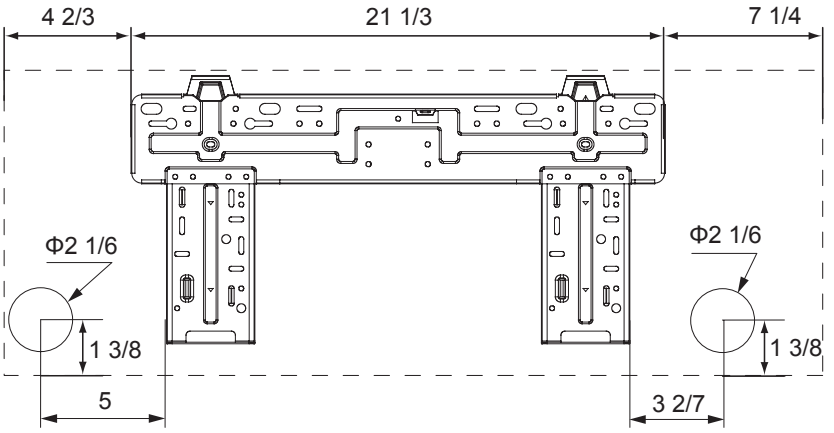

Unit:inch

3.2 Outdoor Unit

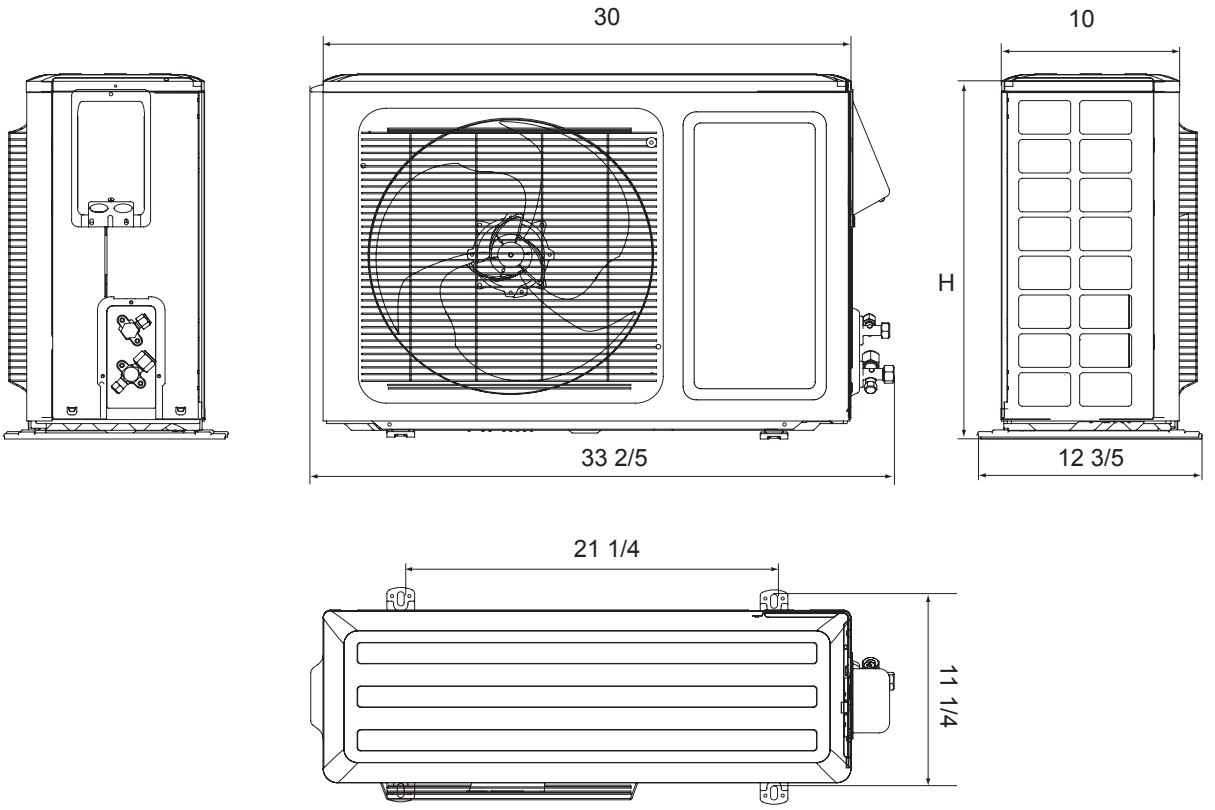

Unit:inch

MODEL	H
09K	21 1/4
12K	23 1/3

4. Refrigerant System Diagram

DCX09NWB11S DCX09CSB11S
DCX12NWB11S DCX12CSB11S
DCX09NWB21S DCX09CSB21S

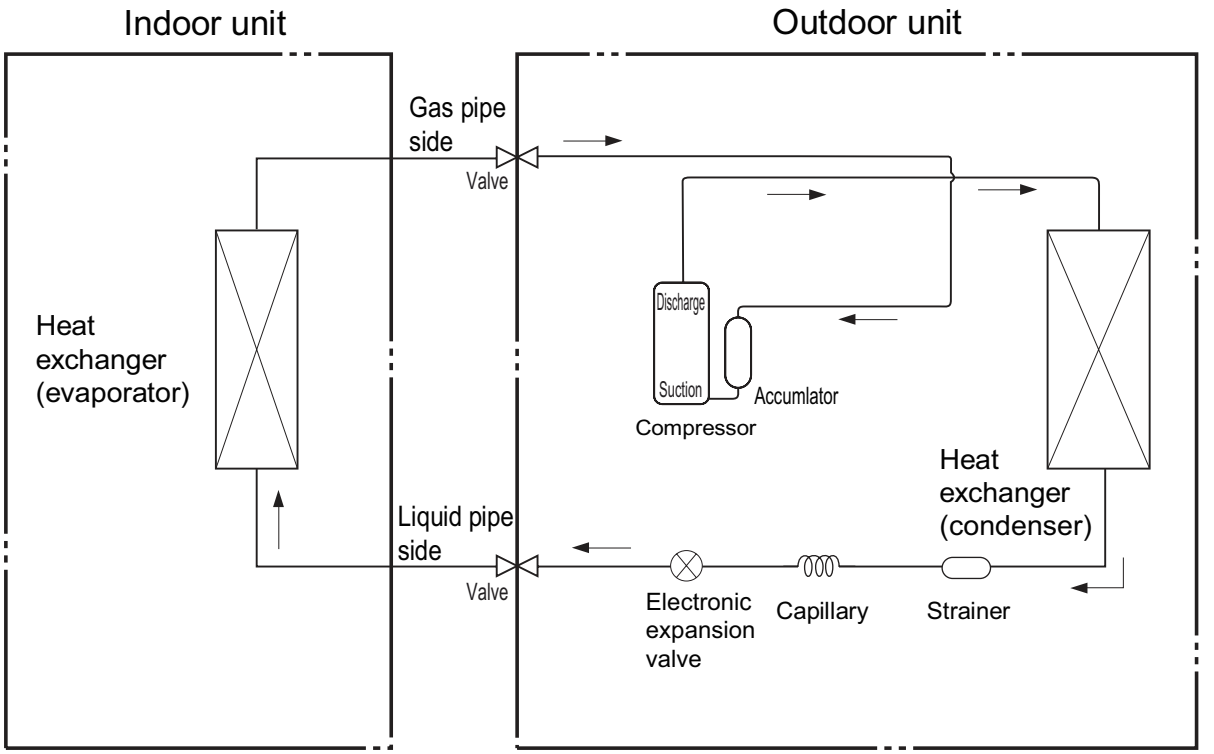

DCX12NWB21S DCX12CSB21S

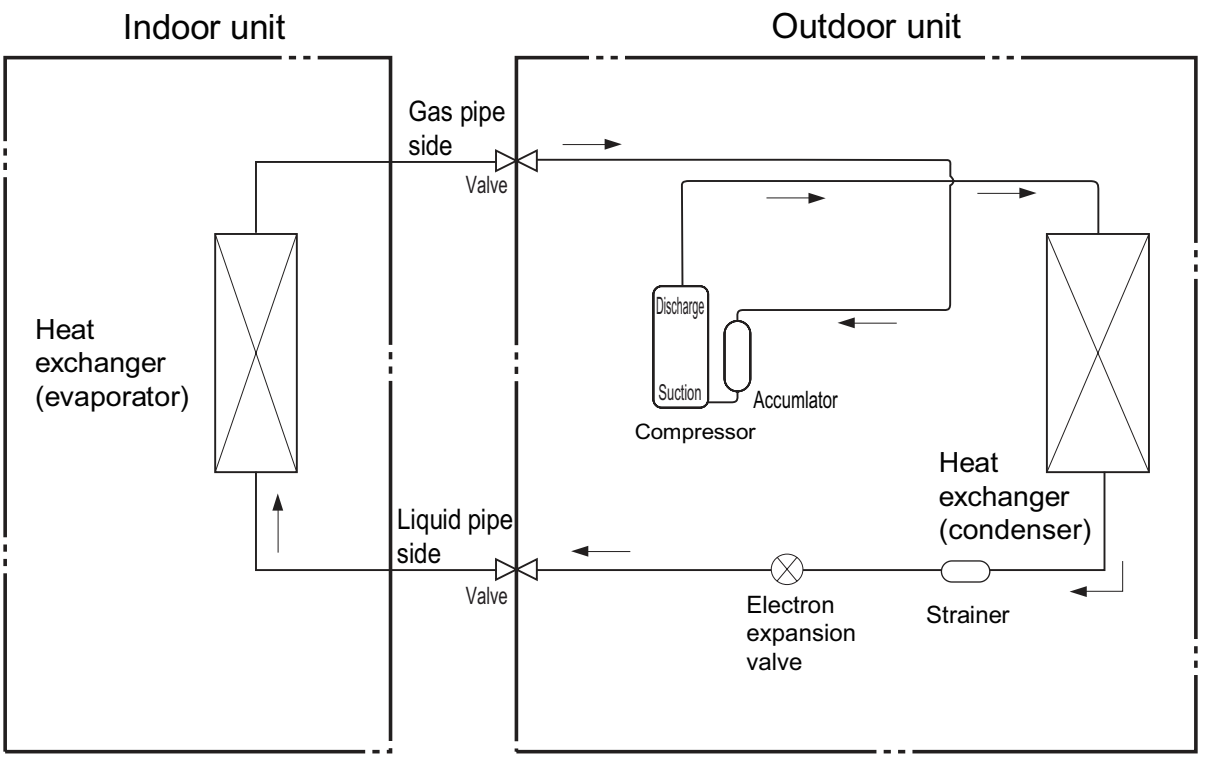

DHX09NWB11S
DHXNWB11S
DHX09NWB21S

DHX09CSB11S
DHX12CSB11S
DHX09CSB21S

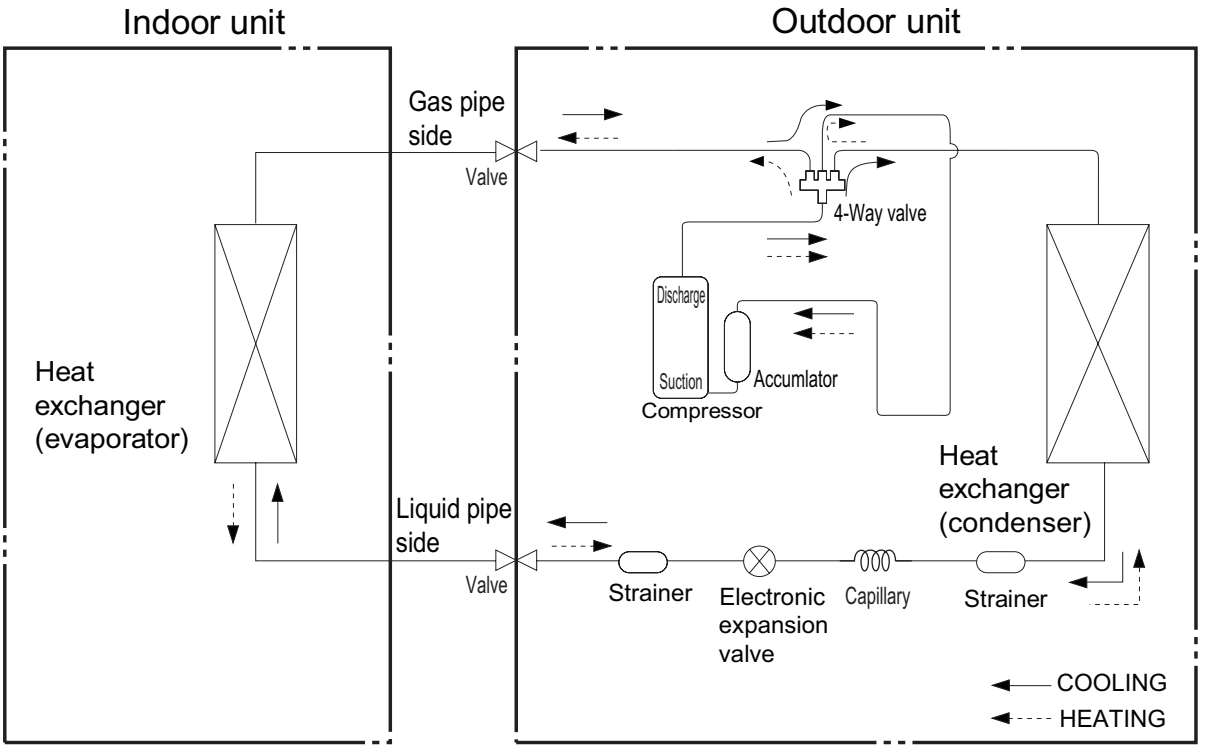

DHX12NWB21S

DHX12CSB21S

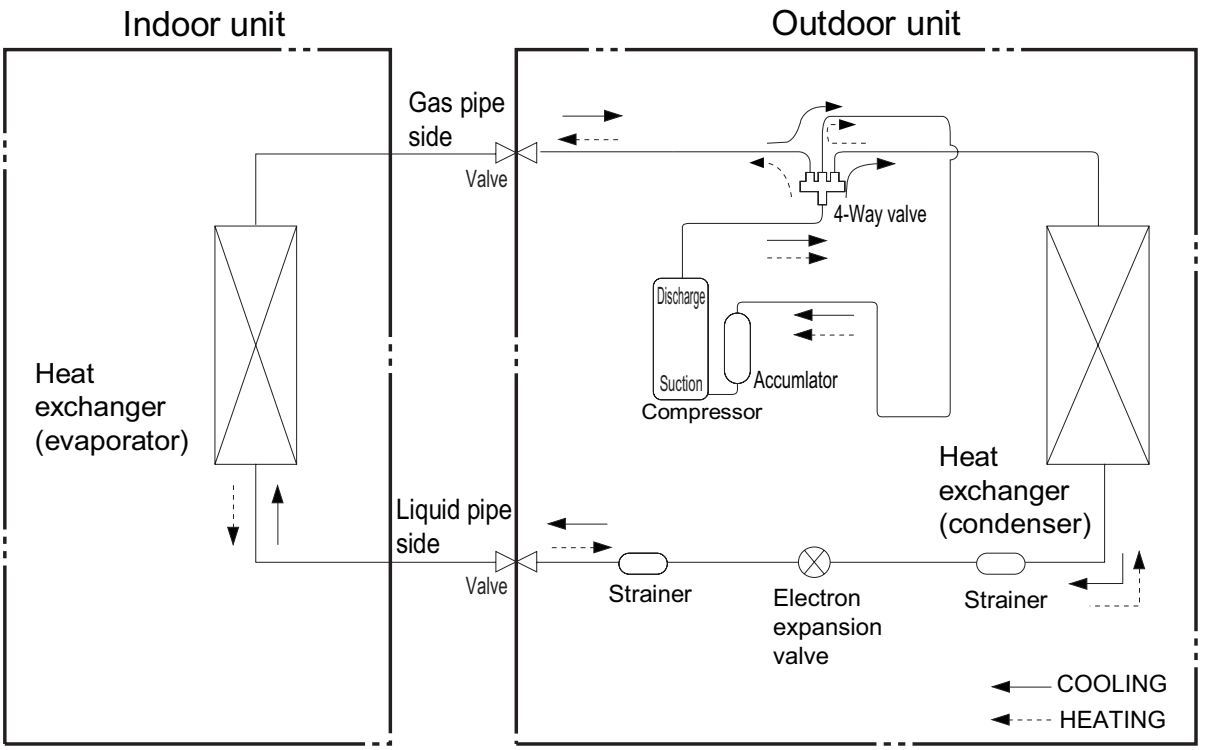

Connection pipe specification:
Liquid pipe:1/4"
Gas pipe:3/8" (09K)
1/2"(12K)

5. Electrical Parts

5.1 Wiring Diagram

● Instruction

Symbol	Symbol Color	Symbol	Symbol Color	Symbol	Name
WH	White	GN	Green	CAP	Jumper cap
YE	Yellow	BN	Brown	COMP	Compressor
RD	Red	BU	Blue	⏚	Grounding wire
YEGN	Yellow/Green	BK	Black	/	/
VT	Violet	OG	Orange	/	/

Note: Jumper cap is used to determine fan speed and the swing angle of horizontal lover for this model.

● Indoor Unit

DHX09NWB11S
DCX09NWB11S
DHX12NWB11S
DCX12NWB11S

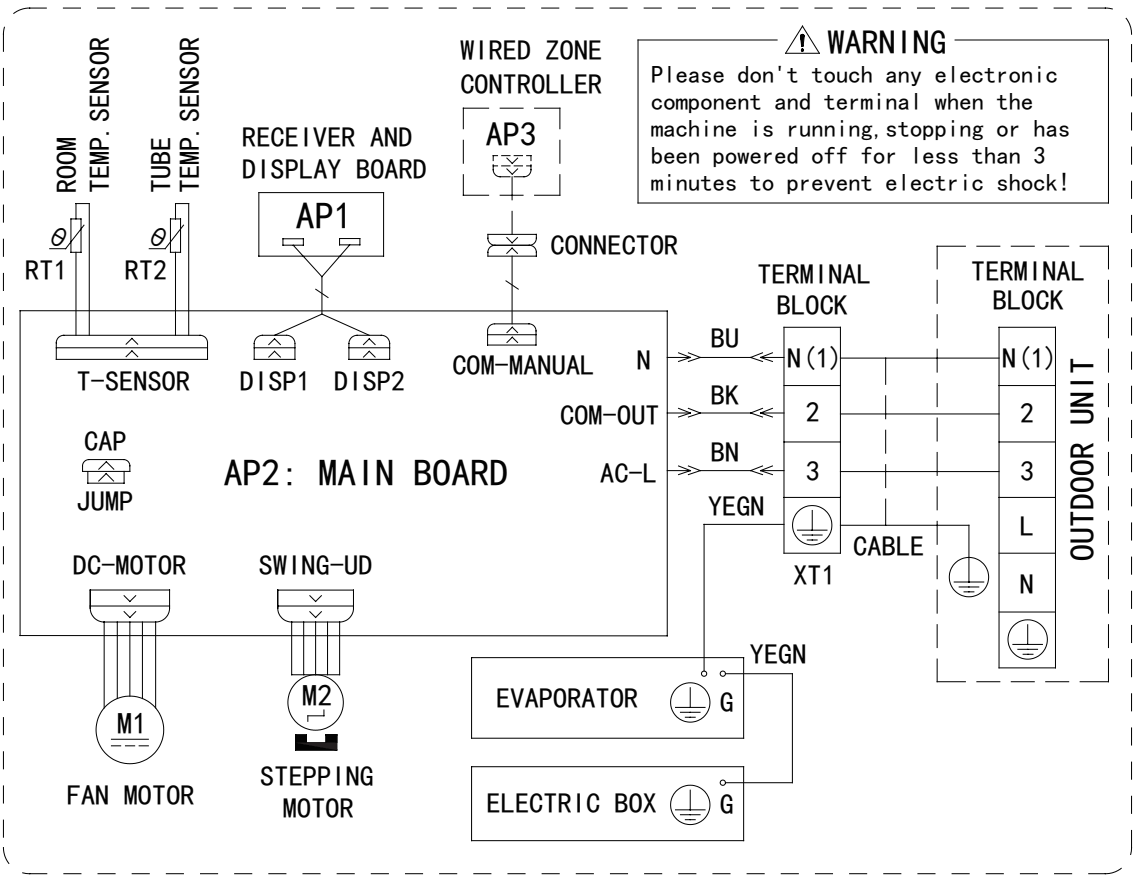

DHX09NWB21S
DCX09NWB21S
DHX12NWB21S
DCX12NWB21S

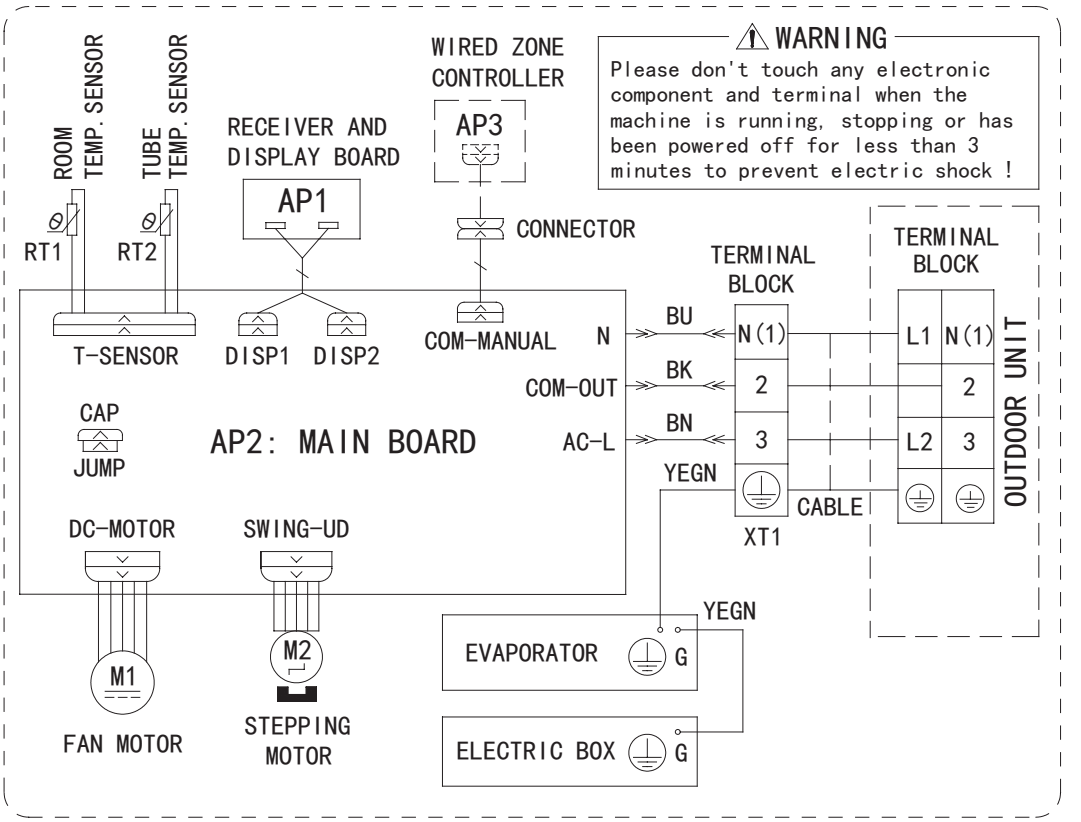

● Outdoor Unit

DCX09CSB11S
DCX12CSB11S

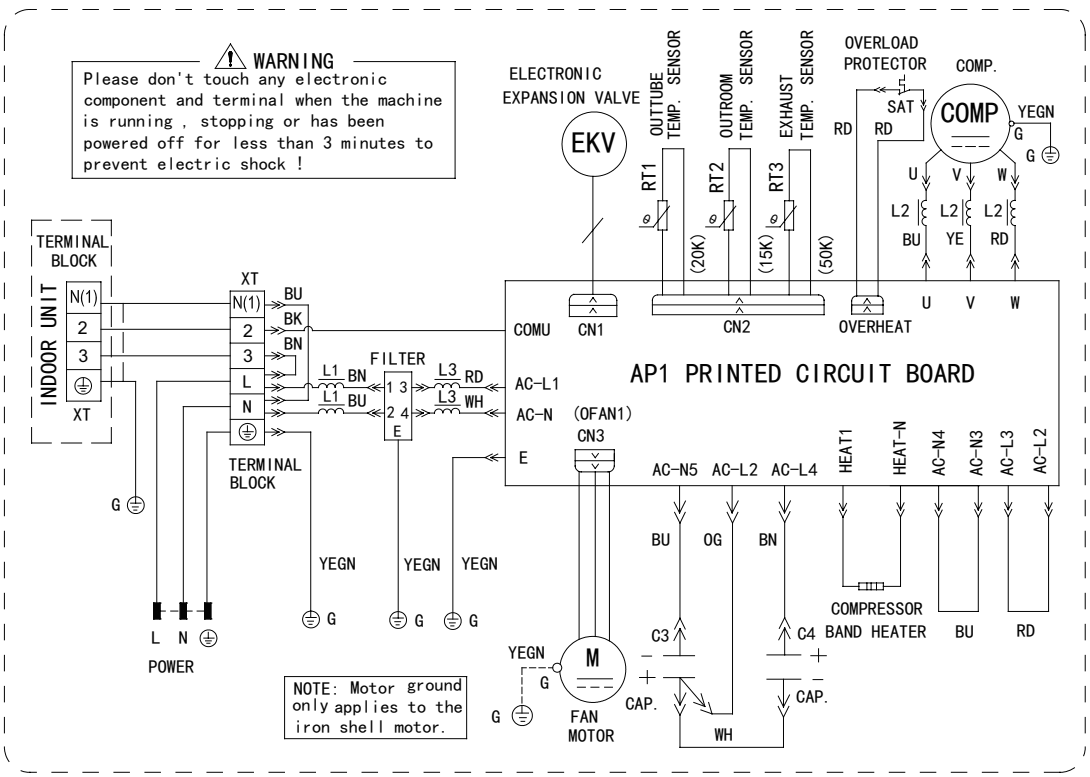

DHX09CSB11S
DHX12CSB11S

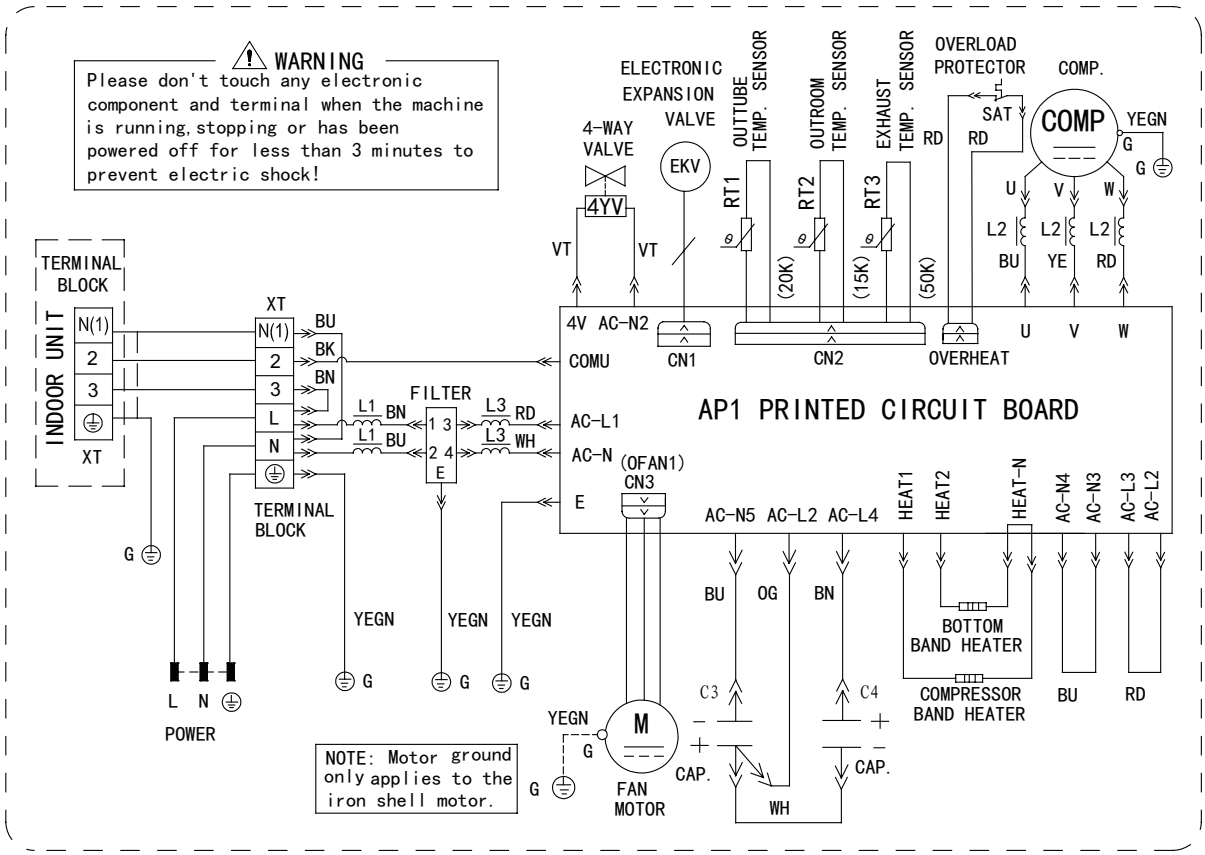

DCX09CSB21S
DCX12CSB21S

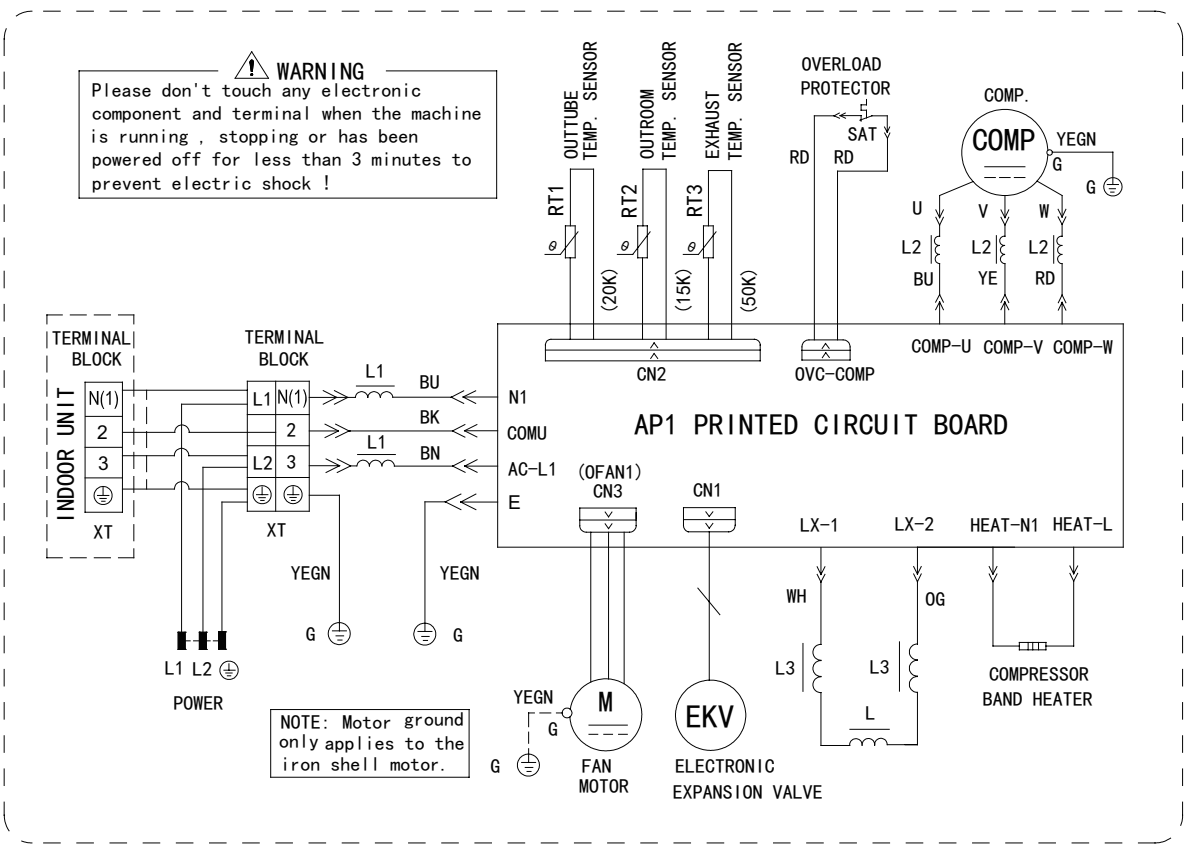

DHX09CSB21S
DHX12CSB21S

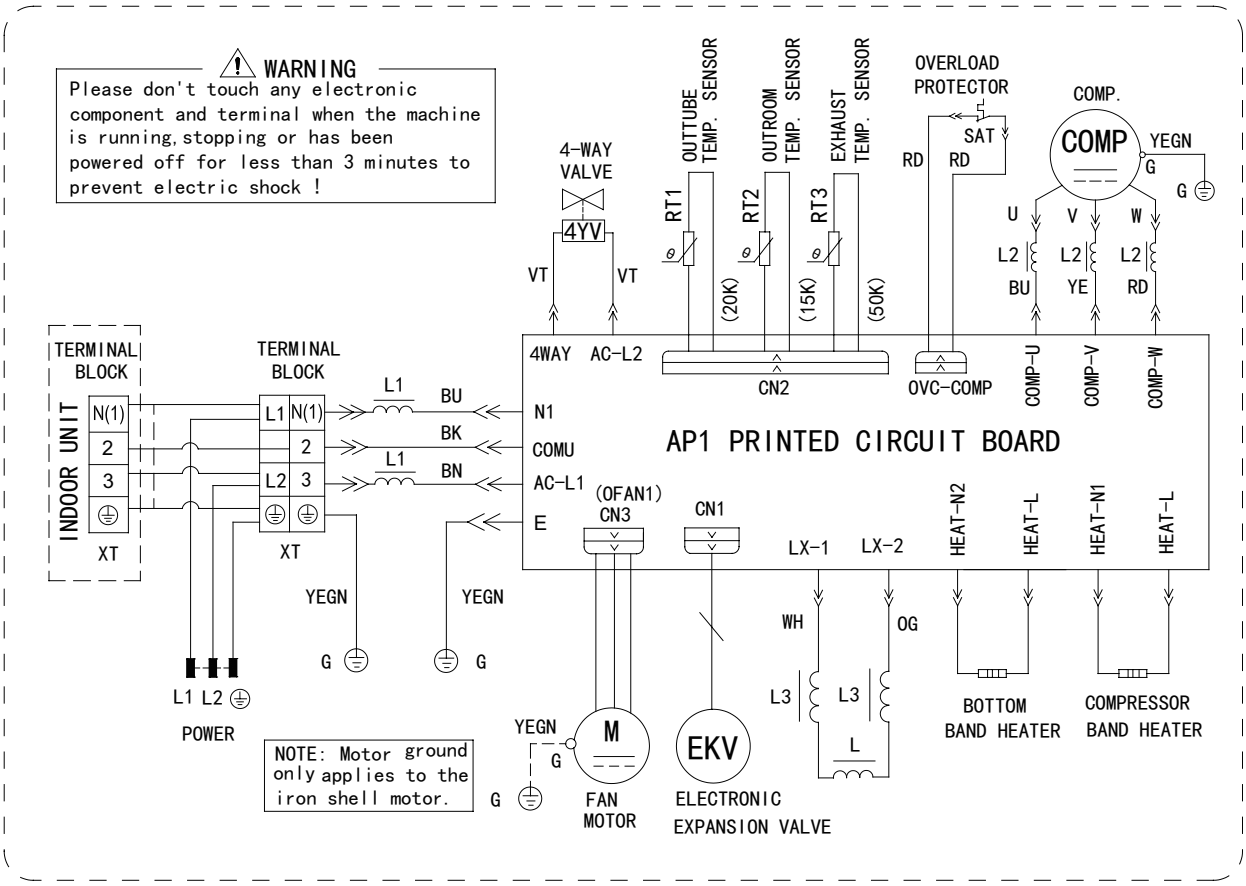

These circuit diagrams are subject to change without notice, please refer to the one supplied with the unit.

5.2 PCB Printed Diagram

Indoor Unit

● Top view

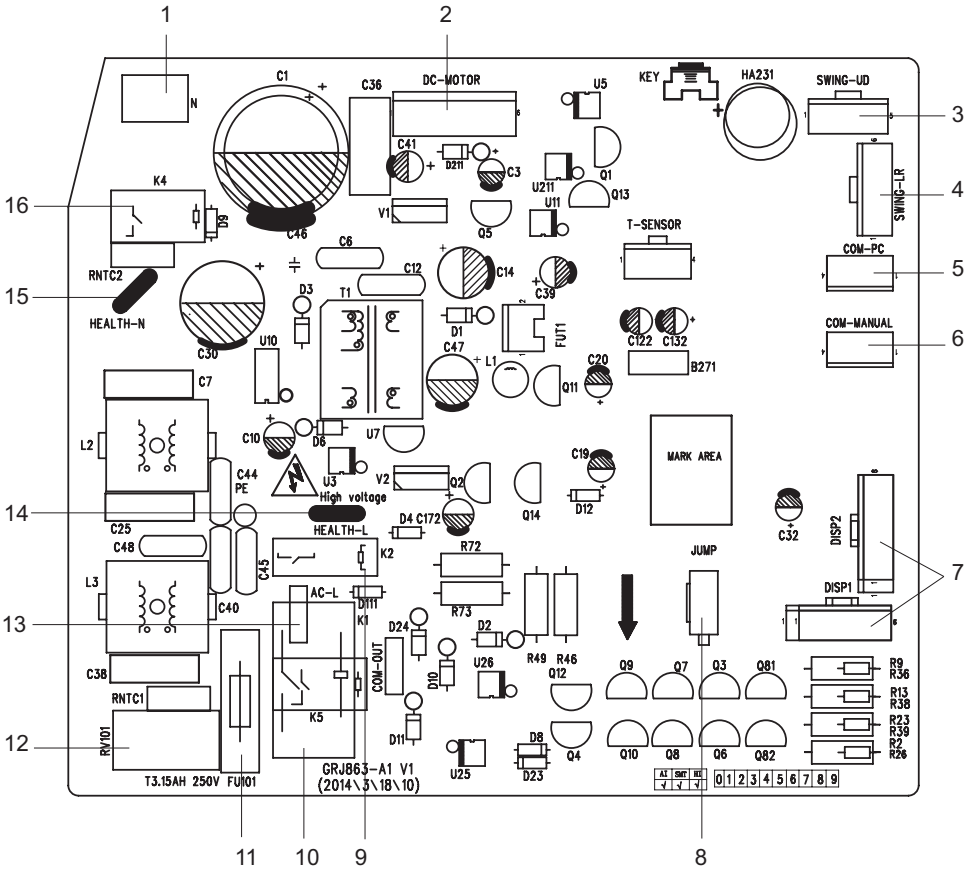

1	Neutral wire
2	DC fan
3	Up&down swing
3	Auto button
4	Left and right swing
5	Interface of wired zone controller
6	Interface of wired zone controller
7	Display interface
8	Jumper interface
9	Relay
10	Relay
11	Fuse
12	Piezo resistance
13	Interface of live wire
14	Live wire of health function
15	Neutral wire of health function
16	Relay

● Bottom view

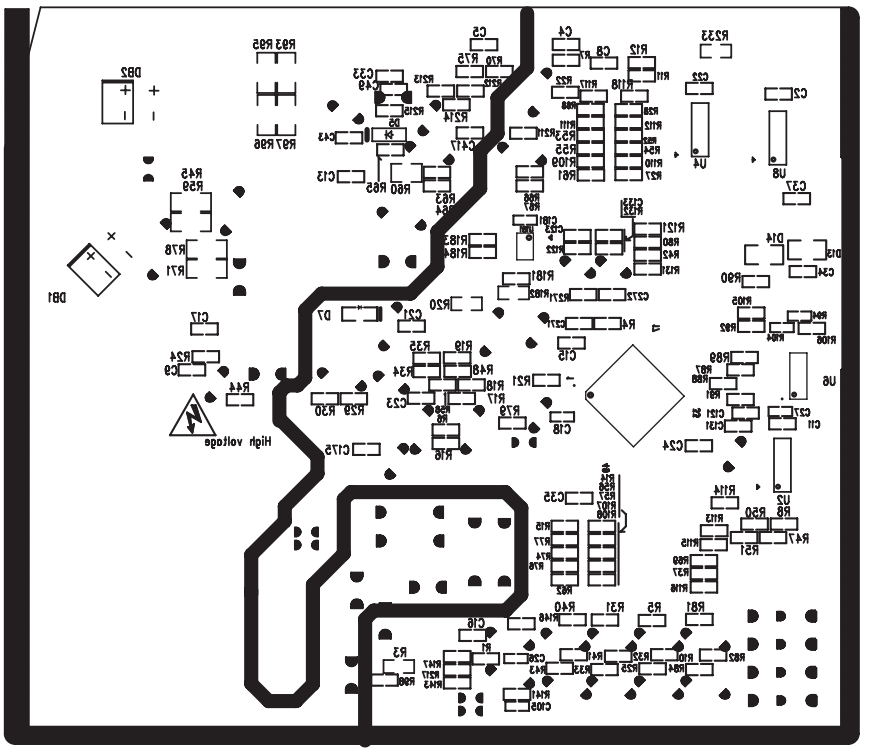

Outdoor Unit

DHX09CSB11S DCX09CSB11S DHX12CSB11S DCX12CSB11S

● Top view

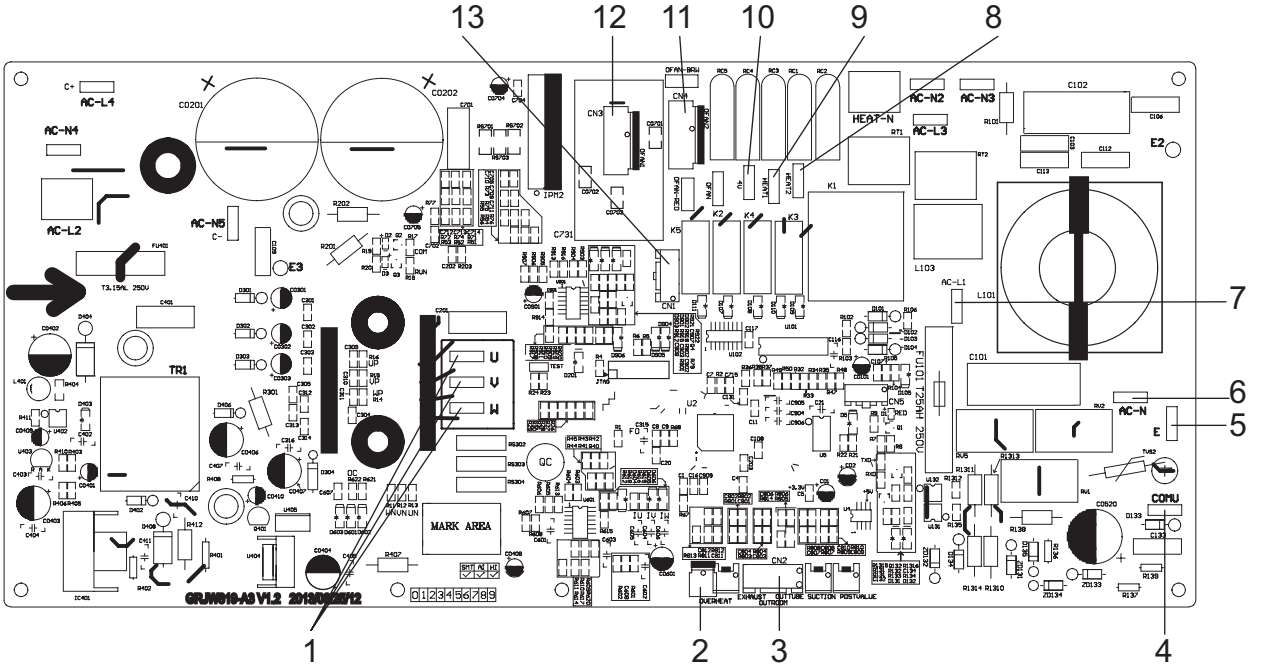

NO.	Name	NO.	Name	NO.	Name
1	Compressor output port	6	Port of power neutral wire	11	Port of AC fan motor
2	Overload port	7	Live wire	12	Port of DC fan motor
3	Temperature sensor port	8	Port of compressor electric heating belt	13	Port of electronic expansion valve
4	Communication wire port	9	Port of compressor electric heating belt	/	/
5	Grounding wire port	10	Port of AC fan motor	/	/

● Bottom view

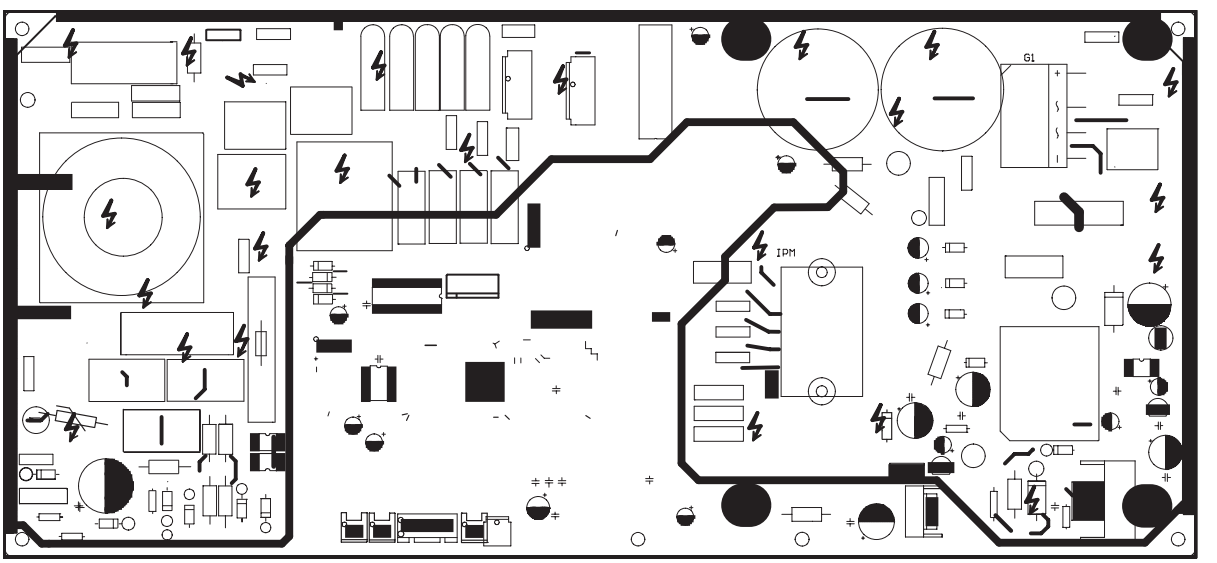

DHX09CSB21S DCX09CSB21S DHX12CSB21S DCX12CSB21S

● Top view

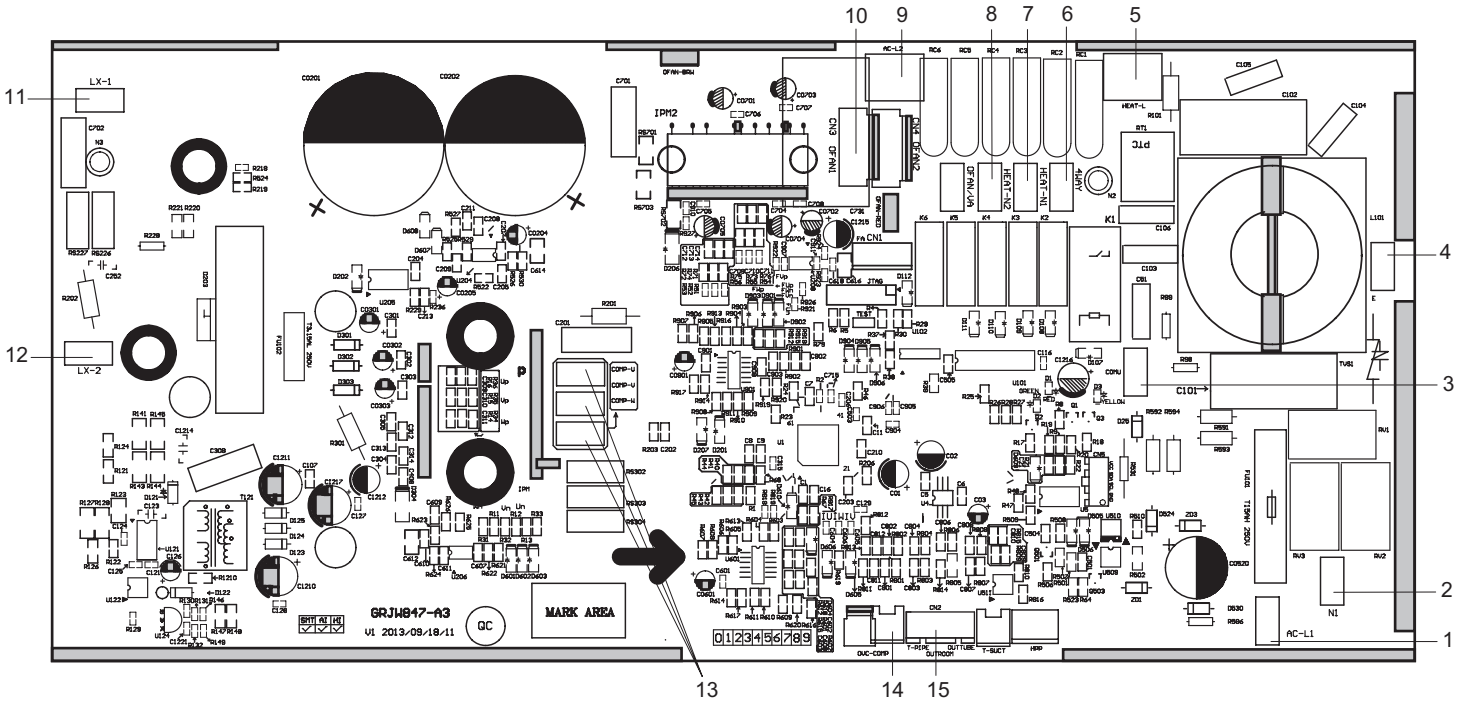

1	Input of live wire of power	4	Input of ground wire of power	7	Neutral wire of electric heater of compressor	10	Interface of fan	13	U,V,W three phases of compressor
2	Input of neutral wire of power	5	Live wire of electric heater	8	Neutral wire of electric heater of chassis	11	Interface 1 of electric reactor	14	Input of overload
3	Communication interface	6	Neutral wire of 4-way valve	9	Live wire of 4-way valve	12	Interface 2 of electric reactor	15	Temp. sensor

● Bottom view

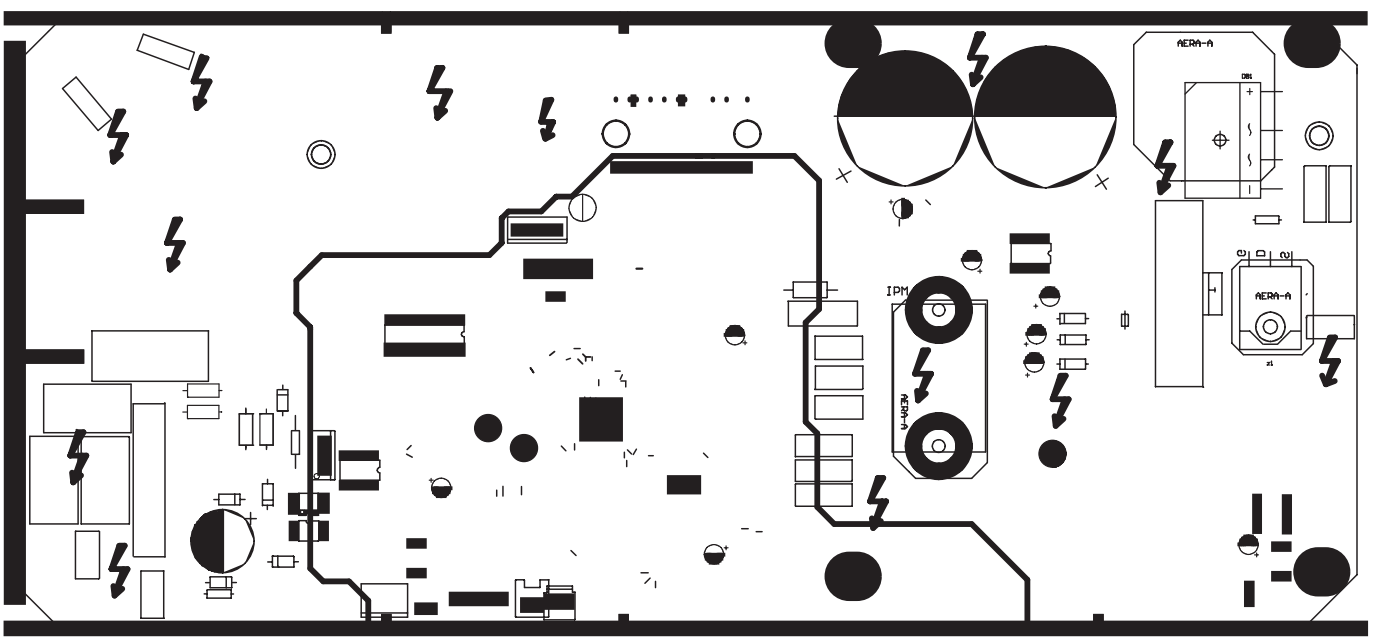

6. Functions and Control

6.1 Controller Introduction

1. ON/OFF button
2. MODE button
3. FAN button
4. SWING button
5. TURBO button
6. ▲/ ▼button
7. SLEEP button
8. TEMP button
9. I FEEL button
10. LIGHT button
11. CLOCK button
12. TIMER ON / TIMER OFF button

Introduction for icons on display screen

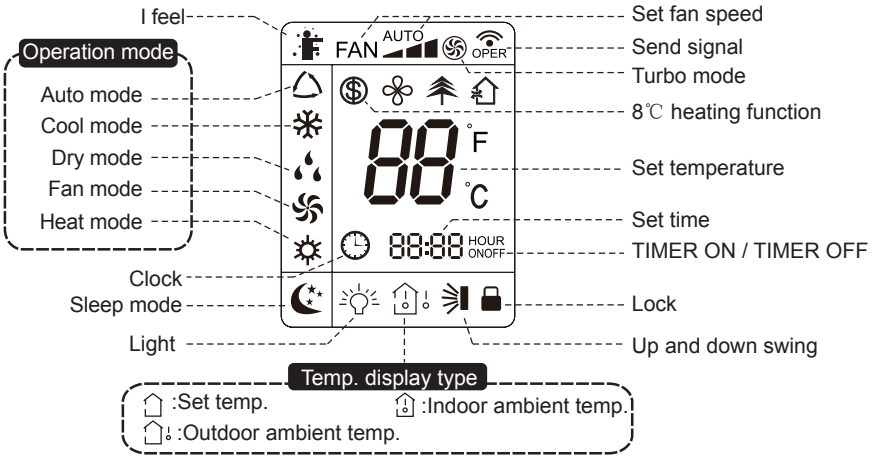

Introduction for buttons on remote controller

Note:

- After putting through the power, the air conditioner will give out a sound. Operation indictor " ⏻ " is ON (red indicator). After that, you can operate the air conditioner by using remote controller.
- Under on status, pressing the button on the remote controller, the signal icon " ᯤ "on the display of remote controller will blink once and the air conditioner will give out a “beep” sound, which means the signal has been sent to the air conditioner.
- Under off status, set temperature and clock icon will be displayed on the display of remote controller (If timer on, timer off and light functions are set, the corre- sponding icons will be displayed on the display of remote controller at the same time); Under on status, the display will show the corresponding set function icons.

1. ON/OFF button

Press this button can turn on or turn off the air conditioner. After turning on the air conditioner, operation indicator " ⏻"on indoor unit's display is ON (green indicator). The color is different for different models, and indoor unit will give out a sound.

2. MODE button

Press this button to select your required operation mode.

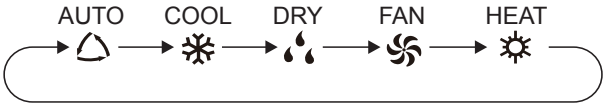

- When selecting auto mode, air conditioner will operate automatically according to ex-factory setting. Set temperature can't be adjusted and will not be displayed as well. Press "FAN" button can adjust fan speed. Press "SWING" button can adjust fan blowing angle.
- After selecting cool mode, air conditioner will operate under cool mode. Cool indicator " ❄ "on indoor unit is ON. Press "▲" or " ▼ " button to adjust set temperature. Press "FAN" button to adjust fan speed. Press "SWING" button to adjust fan blowing angle.
- When selecting dry mode, the air conditioner operates at low speed under dry mode. Dry indicator " 💧 " on indoor unit is ON. Under dry mode, fan speed can't be adjusted. Press "SWING" button to adjust fan blowing angle.
- When selecting fan mode, only the indoor fan will be on to circulate the indoor air. No cooling and no heating. All indicators are OFF. Press "FAN" button to adjust fan speed. Press "SWING" button to adjust fan blowing angle.
- When selecting heating mode, the air conditioner operates under heat mode. Heat indicator " ☼ " on indoor unit is ON. Press "▲" or " ▼ " button to adjust set temperature. Press "FAN" button to adjust fan speed. Press "SWING" button to adjust fan blowing angle. (Cooling only unit won't receive heating mode signal. If setting heat mode with remote controller, pressing ON/OFF button can't start up the unit).

Note:

- For preventing cold air, after starting up heating mode, indoor fan will delay until the indoor coil reaches preset factory temperature that is controlled by the inlet pipe sensor. Normal for the preset temp is 92 degrees F.
- Setting temperature range from remote controller: 60.8°F~86.0°F (16°C~30℃) ; Fan speed: auto, low speed, medium speed, high speed.

3. FAN button

Pressing this button can set fan speed circularly as: auto (AUTO), low(◢) ,medium(◢◢), high(◢◢◢).

Caution:

- Under AUTO speed, air conditioner will select proper fan speed automatically according to factory setting.
- Fan speed under dry mode is low speed.

4. SWING button

Pressing this button can select up and down swing angle. Fan blow angle can be selected sequentially as below:

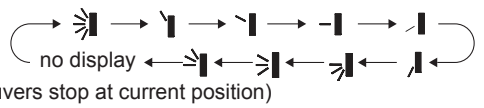

(horizontal louvers stop at current position)

- When selecting " ", air conditioner is blowing fan automatically. Horizontal louver will automatically swing up & down at maximum angle.
- When selecting "、、、、", air conditioner is blowing fan at fixed position. Horizontal louver will stop at the fixed position.
- When selecting " 、、 " , air conditioner is blowing fan at fixed angle. Horizontal louver will send air at the fixed angle.
- Hold " "button above 2s to set your required swing angle. When reaching your required angle, release the button.

Note:

- " 、、 " may not be available. When air conditioner receives this signal, the air conditioner will blow fan automatically.

5. TURBO button

Under COOL or HEAT mode, press this button to turn to quick COOL or quick HEAT mode. " " icon is displayed on remote controller. Press this button again to exit turbo function and " " icon will disappear.

6. ▲/▼ button

- Press "▲" or "▼" button once increase or decrease set temperature 1℃ (33.8°F). Holding "▲" or "▼" button, 2s later, set temperature on remote controller will change quickly. On releasing button after setting is finished, temperature indicator on indoor unit will change accordingly. (Temperature can't be adjusted under auto mode)
- When setting TIMER ON, TIMER OFF or CLOCK, press "▲" or "▲" button to adjust time. (Refer to CLOCK, TIMER ON, TIMER OFF buttons) When setting TIMER ON, TIMER OFF or CLOCK, press "▲" or "▲" button to adjust time. (Refer to CLOCK, TIMER ON, TIMER OFF buttons)

7. SLEEP button

Under COOL, HEAT or DRY mode, press this button to start up sleep function. " " icon is displayed on remote controller. Press this button again to cancel sleep function and " " icon will disappear.

8. TEMP button

By pressing this button, you can see indoor set temperature, indoor ambient temperature or outdoor ambient temperature on indoor unit's display. The setting on remote controller is selected sequentially as below:

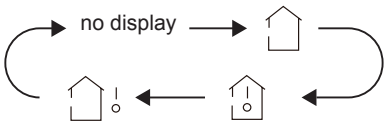

- When selecting " " or no display with remote controller, temperature indicator on indoor unit displays set temperature.
- When selecting " " with remote controller, temperature indicator on indoor unit displays indoor ambient temperature.
- When selecting " " with remote controller, temperature indicator on indoor unit displays outdoor ambient temperature.

Note:

- Outdoor temperature display is not available for some models. At that time, indoor unit receives " "signal, while it displays indoor set temperature.
- It's defaulted to display set temperature when turning on the unit.There is no display in the remote controller.
- **Only for the models whose indoor unit has dual 8 display.**
- When selecting display of indoor or outdoor ambient temperature, indoor temperature indicator displays corresponding temperature and automatically turns to display set temperature after three or five seconds.

9. I FEEL button

Press this button to start I FEEL function and " " will be displayed on the remote controller. After this function is set, the remote controller will send the detected ambient temperature to the controller and the unit will automatically adjust the indoor temperature according to the detected temperature. Press this button again to close I FEEL function and " " will disappear.

- Please put the remote controller near user when this function is set. Do not put the remote controller near the object of high temperature or low temperature in order to avoid detecting inaccurate ambient temperature.

10. LIGHT button

Press this button to turn off display light on indoor unit. " " icon on remote controller disappears. Press this button again to turn on display light. " " icon is displayed.

11. CLOCK button

Press this button to set clock time. " " icon on remote controller will blink. Press "▲" or "▼" button within 5s to set clock time. Each pressing of "▲" or "▼" button, clock time will increase or decrease 1 minute. If hold "▲" or "▼" button, 2s later, time will change quickly. Release this button when reaching your required time. Press "CLOCK" button to confirm the time. " " icon stops blinking.

Note:

- Clock time adopts 24-hour mode.
- The interval between two operations can't exceed 5s. Otherwise, remote controller will quit setting status. Operation for TIMER ON/TIMER OFF is the same.

12. TIMER ON / TIMER OFF button

- TIMER ON button

  "TIMER ON" button can set the time for timer on. After pressing this button, " " icon disappears and the word "ON" on remote controller blinks. Press "▲" or "▼"button to adjust TIMER ON setting. After each pressing "▲" or "▼" button, TIMER ON setting will increase or decrease 1min. Hold "▲" or "▼" button, 2s later, the time will change quickly until reaching your required time. Press "TIMER ON" to confirm it. The word "ON" will stop blinking. " " icon resumes displaying. Cancel TIMER ON: Under the condition that TIMER ON is started up, press "TIMER ON" button to cancel it.
- TIMER OFF button

  "TIMER OFF" button can set the time for timer off. After pressing this button," " icon disappears and the word "OFF" on remote controller blinks. Press "▲" or "▼" button to adjust TIMER OFF setting. After each pressing "▲" or "▼" button,
  TIMER OFF setting will increase or decrease 1min. Hold "▲" or "▼" button, 2s later, the time will change quickly until reaching your required time. Press "TIMER OFF" word "OFF" will stop blinking. " " icon resumes displaying. Cancel TIMER OFF. Under the condition that TIMER OFF is started up, press "TIMER OFF" button to cancel it.

Note:

- Under on and off status, you can set TIMER OFF or TIMER ON simultaneously.
- Before setting TIMER ON or TIMER OFF, please adjust the clock time.
- After starting up TIMER ON or TIMER OFF. After that, the air conditioner will be turned on or turned off according to setting time. ON/OFF button has no affect on setting. If you don't need this function, please use remote controller to cancel it.

Function introduction for combination buttons

1. Energy-saving function

Under cooling mode, press "TEMP" and " CLOCK" buttons simultaneously to start up or turn off energy-saving function. When energy-saving function is started up, "SE" will be shown on remote controller, and air conditioner will adjust the set temperature automatically according to factory setting to reach to the best energy-saving effect. Press "TEMP" and "CLOCK"buttons simultaneously again to exit energy-saving function.

Note:

- Under energy-saving function, fan speed is defaulted at auto speed and it can't be adjusted.
- Under energy-saving function, set temperature can't be adjusted. Press "TURBO" button and the remote controller won't send signal.
- Sleep function and energy-saving function can't operate at the same time. If energy-saving function has been set under cooling mode, pressing sleep button will cancel energy-saving function. If sleep function has been set under cooling mode, starting up the energy-saving function will cancel the sleep function.

2. 8 ℃ heating function

Under heating mode, press "TEMP" and "CLOCK" buttons simultaneously to start up or turn off (8℃) heating function. When this function is started up, " $ " and "8℃ " will be shown on remote controller, and the air conditioner keeps the heating status at 8℃. Press "TEMP" and "CLOCK" buttons simultaneously again to exit 8℃ heating function.

Note:

- Under 8℃ heating function, fan speed is defaulted at auto speed and it can't be adjusted.
- Under 8℃ heating function, set temperature can't be adjusted. Press "TURBO" button and the remote controller won't send signal.
- Sleep function and 8℃ heating function can't operate at the same time. If 8℃ heating function has been set under cooling mode, press sleep button will cancel 8℃ heating function. If sleep function has been set under cooling mode, start up the 8℃ heating function will cancel sleep function.
- Under ℉ temperature display, the remote controller will display 46 ℉ heating.

3. ock function

Press "▲" and "▼" simultaneously to turn on or turn off child lock function. When child lock function is on, " 🔒 " icon is displayed on remote controller. If you operate the remote controller, the " 🔒 " icon will blink three times without sending signal to the unit.

4. Temperature display switch over function

Under OFF status, press "▼" and "MODE" buttons simultaneously to switch temperature display between ℃ and ℉ .

Operation guide

1. After putting through the power, press "ON/OFF" button on remote controller to turn on the air conditioner.
2. Press "MODE" button to select your required mode: AUTO, COOL, DRY, FAN, HEAT.
3. Press "▲" or "▼" button to set your required temperature. (Temperature can't be adjusted under auto mode).
4. Press "FAN" button to set your required fan speed: auto, low, medium and high speed.
5. Press "SWING" button to select fan blowing angle.

Replacement of batteries in remote controller

1. Press the back side of remote controller marked with " OPEN ", as shown in the figure, and then push out the cover of battery box along the arrow direction.
2. Replace two 7# (AAA 1.5V) dry batteries, and make sure the position of "+" polar and "-" polar are correct.
3. Reinstall the cover of battery box.

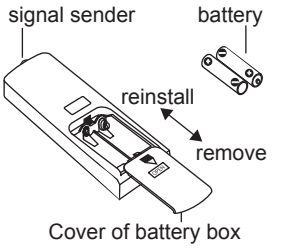

Note:

- During operation, point the remote control signal sender at the receiving window on indoor unit.
- **The distance etween signal sender and receiving window should e no more than 26ft (8m) and there should e no o stacles etween them**.
- Signal may have interference in a room where there is fluorescent light or wireless telephone; remote controller should be close to indoor unit during operation.
- Replace new batteries of the same model when replacement is required.
- When you don't use remote controller for a long time, please take out the batteries.
- If the display on remote controller is fuzzy or there's no display, please replace batteries.

6.2 Brief Description of Modes and Functions

● Indoor Unit

1.Basic function of system

(1)Cooling mode

(1) Under this mode, fan and swing operate at setting status.

(2) During malfunction of outdoor unit or the unit is stopped because of protection, indoor unit keeps original operation status.

(2)Drying mode

(1) Under this mode, fan operates at low speed and swing operates at setting status.

(2) During malfunction of outdoor unit or the unit is stopped because of protection, indoor unit keeps original operation status.

(3) Protection status is same as that under cooling mode.

(4) Sleep function is not available for drying mode.

(3)Heating mode

(1) Under this mode, Temperature setting range is 60.8~86.0^{O}F.

(2) Working condition and process for heating mode:

When turn on the unit under heating mode, the indoor fan will stop until the indoor coil reaches factory preset temperature to prevent cold air start up. Normally the coil has to reach 92°F before the indoor fan slowly ramps up.

(4)Working method for AUTO mode:

1.Working condition and process for AUTO mode:

a.Under AUTO mode, standard heating Tpreset=68.0^{O}F and standard cooling Tpreset=77.0^{O}F. The unit will switch mode automatically according to ambient temperature.

2.Protection function

a. During cooling operation, protection function is same as that under cooling mode.

b. During heating operation, protection function is same as that under heating mode.

3. Display: Set temperature is the set value under each condition.

4. If there's I feel function, Tcompensation is 0. Others are same as above.

(5)Fan mode

Under this mode, indoor fan operates at set fan speed. There will be no outdoor unit function in fan mode. This mode is only to circulate the ambient indoor air. Indoor fan can select to operate at high, medium, low or auto fan speed. Temperature setting range is 60.8°F~86.0^{O}F.

2. Other control

(1) Buzzer

Upon energization or availably operating the unit or remote controller, the buzzer will give out a beep.

(2) Auto button

If press this auto button when turning off the unit, the complete unit will operate at according to the preset factory temperature (heat /cool) setting for auto mode and can not be changed. Indoor fan operates at auto fan speed and swing function if the unit is in cool mode. If the unit is in heat mode the indoor fan will follow preheating protocol and fan speed can't be adjusted. Press this auto button at ON status to turn off the unit.

(3) Auto fan

Heating mode: During auto heating mode or normal heating mode, auto fan speed will adjust the fan speed automatically according to the indoor coil sensor. This is a factory preset temperature that can not be changed. This is to prevent cool air start up (preheating).

(4) Sleep

After setting sleep function for a period of time, system will adjust set temperature automatically.

(5) Timer function:

General timer and clock timer functions are compatible by equipping remote controller with different functions.

(6) Memory function

When power has been interrupted the unit will auto restart in the last mode settings before the power interruption. This is also known as auto restart.

(7) Health function

Health function is to dry out the indoor coil to prevent mold and mildew building up on the indoor coil by running the indoor fan after the unit has reach setpoint in cool mode.

(8)I feel control mode

I FEEL Mode is the hand held remote take over the sensing instead of the indoor air sensor. The indoor remote need to be in the line of sight of the indoor unit no more than 24ft away. Remember not to put the remote near any type of heat source.

(9)Compulsory defrosting function

(1) Start up compulsory defrosting function

Under ON status, set heating mode with remote controller and adjust the temperature to 60.8^{O}F. Press “+, -, +, -, +,-” button successively within 5s and the complete unit will enter into compulsory defrosting status. Meanwhile, heating indicator on indoor unit will ON 10s and OFF 0.5s successively. (Note: If complete unit has malfunction or stops operation due to protection, compulsory defrosting function can be started up after malfunction or protection is resumed.

(2) Exit compulsory defrosting mode

After compulsory defrosting is started up, the complete unit will exit defrosting operation according to the actual defrosting result, and the complete unit will resume normal heating operation.

(10)Refrigerant recovery function:

(1) Enter refrigerant recycling function

Within 5min after energizing (unit ON or OFF status is ok), continuously press LIGHT button for 3 times within 3s to enter refrigerant recycling mode; Fo will be displayed and refrigerant recycling function is started. At this moment, close the liquid valve. After 5min, make sure there is no refrigerant in the line sets, also make sure the king valve is closed before removing the line set / copper tubing.This function is also known as pump down.

(2) Exit refrigerant recovery function

After entering refrigerant recovery mode, the unit will stay in Refrigerant Recovery Function for 25 minutes. After the 25 minutes have passed the unit will return to the last state of operation before Refrigerant Recovery Function was activated (stand-by, cooling, heating).

(11)Ambient temperature display control mode

1. When user sets the remote controller to display set temperature (corresponding remote control code: 01), current set temperature will be displayed.

2. Only when remote control signal is switched to indoor ambient temperature display status (corresponding remote control code: 10) from other display status (corresponding remote control code: 00, 01,11), controller will display indoor ambient temperature for 3s and then turn back to display set temperature.

Under this mode, indoor fan operates at set fan speed. Compressor, outdoor fan, 4-way valve and electric heating tube stop operation. Indoor fan can select to operate at high, medium, low or auto fan speed.

(12)Off-peak energization function:

The unit has a 3 minute delay on first start up. After the compressor cycles off, the compressor has a 3 minute 15 second delay if the system has not equalized pressure and gets a call for any mode.

(13) SE control mode

The unit operates at SE status.

(14) X-fan mode

When X-fan function is turned on, after turn off the unit, indoor fan will still operate at low speed for 2min and then the complete unit will be turned off. When x-fan function is turned off, after turn off the unit, the complete unit will be turned off directly.

(15) 8º heating function

This is freeze protection 8°C is 46°F. This mode is for heating only. When this mode is selected, the unit will heat to maintain a room temp 46°F (freeze protection).

(16) Turbo fan control function

Set turbo function under cooling or heating mode to enter into turbo fan speed. Press fan speed button to cancel turbo wind.

No turbo function under auto, dry or fan mode.

Outdoor Units

1. Input Parameter Compensation and Calibration

(1) Check the ambient temperature compensation function Indoor ambient temperature compensation function.

a. In cooling mode, the indoor ambient temperature participating in computing control = ($T_{indoor\ ambient\ temperature}$ – ⊿ $T_{cooling\ indoor\ ambient\ temperature\ compensation}$)

b. In heating mode, the indoor ambient temperature participating in computing control= ($T_{indoor\ ambient\ temperature}$ – ⊿ $T_{heating\ indoor\ ambient\ temperature\ compensation}$)

(2) Check effective judgment controls of parameters

Effective judgment function of the outdoor exhaust temperature thermo-bulb When conditions a and b are satisfied, the outdoor exhaust temperature thermo-bulb is judged not to be connected into place. The mainboard of outdoor units will display failure of the outdoor exhaust temperature thermo-bulb (not connected into place). Stop the machine for repairs and resume operation using ON/OFF of remote control.

a. Judgment of exhaust detection temperature change:

After the compressor starts up and runs for 10 minutes, if the compressor frequency f ≥ 40Hz, and the rising value Texhaust ($T_{exhaust\ (after\ start\text{-}up\ for\ 10\ minutes)}$ - $T_{exhaust\ (before\ start\text{-}up)}$) <35.6ºF , the outdoor exhaust temperature thermo-bulb can be judged not to be connected into place (judging once when the power is on the first time).

b. Comparative judgment of exhaust detection temperature and condenser detection temperature ($T_{pipe\ temperature}$ = $T_{outdoor\ pipe\ temperature\ in\ cooling\ mode}$, $T_{pipe\ temperature}$ = $T_{indoor\ pipe\ temperature\ in\ heating\ mode}$): After the compressor starts up and runs for 10 minutes, if the compressor frequency f ≥ 40Hz, and $T_{pipe\ temperature}$ ≥($T_{exhaust+37.4}$), the outdoor exhaust temperature thermobulb can be judged not to be connected into place (judging once when power is on the first time).

2. Basic Functions

(1) Cooling Mode

1. Conditions and processes of cooling operation:

(1) If the compressor is shut down, and [Tsetup – ($T_{indoor\ ambient\ temperature}$ – ⊿ $T_{cooling\ indoor\ ambient\ temperature\ compensation}$)] ≤ 32.9ºF , start up the machine for cooling, the cooling operation will start;

(2) During operations of cooling, if 32ºF ≤ [Tsetup – ($T_{indoor\ ambient\ temperature}$ – ⊿ $T_{cooling\ indoor\ ambient\ temperature\ compensation}$)] < 35.6ºF , the cooling operation will be still running;

(3) During operations of cooling, if 35.6ºF ≤ [Tsetup – ($T_{indoor\ ambient\ temperature}$ – ⊿ $T_{cooling\ indoor\ ambient\ temperature\ compensation}$)], the cooling operation will stop after reaching the temperature point.

2. Temperature setting range

(1) If $T_{outdoor\ ambient\ temperature}$ ≥ [$T_{low\text{-}temperature\ cooling\ temperature}$], the temperature can be set at: 60.8~86ºF (Cooling at room temperature);

(2) If $T_{outdoor\ ambient\ temperature}$ < [$T_{low\text{-}temperature\ cooling\ temperature}$], the temperature can be set at: 77~86ºF (Cooling at low temperature), that is, the minimum setting temperature for outer units judgment is 77ºF .

(2) Dehumidifying Mode

1. Conditions and processes of dehumidifying operations: Same as the cooling mode;
2. The temperature setting range is: 60.8°F~86ºF;

(3) Fan Mode

1. The indoor fan will be the only thing activated on.
2. The temperature setting range is: 60.8~86ºF.

(4) Heating Mode

1. Conditions and processes of heating operations: (Tindoor ambient temperature is the actual detection temperature of indoor environment thermo-bulb, Theating indoor ambient temperature compensation is the indoor ambient temperature compensation during heating operations)

(1) If the compressor is shut down, and [($T_{indoor\ ambient\ temperature}$ – ⊿ $T_{heating\ indoor\ ambient\ temperature\ compensation}$) –$T_{setup}$] ≤ 32.9ºF , start the machine to enter into heating operations for heating;

(2) During operations of heating, if 32ºF ≤ [($T_{indoor\ ambient\ temperature}$ – ⊿ $T_{heating\ indoor\ ambient\ temperature\ compensation}$) –$T_{setup}$] < 35.6ºF , the heating operation will be still running;

(3) During operations of heating, if 35.6ºF ≤ [($T_{indoor\ ambient\ temperature}$ – ⊿ $T_{heating\ indoor\ ambient\ temperature\ compensation}$) –$T_{setup}$], the heating operation will stop after reaching the temperature point.

2. The temperature setting range in this mode is: 60.8~86ºF .

3. Special Functions

Defrosting Control

① Conditions for starting defrosting

After the time for defrosting is judged to be satisfied, if the temperature for defrosting is satisfied after detections for continuous 3minutes, the defrosting operation will start.

② Conditions of finishing defrosting

The defrosting operation can exit when any of the conditions below is satisfied:

③ $T_{outdoor\ pipe\ temperature} \geq (T_{outdoor\ ambient\ temperature} - [T_{temperature\ 1\ of\ finishing\ defrosting}]$;

④ The continuous running time of defrosting reaches [tmax. defrosting time].

4. Control Logic

(1) Compressor Control

Start the compressor after starting cooling, heating, dehumidifying operations, and the outer fans start for 5s; When the machine is shut down, in safety stops and when switching to air-supplying mode, the compressor will stop immediately. In all modes: once the compressor starts up, it will not be abe to stop until having run for the [tmin. compressor running time] (Note: including cases of shutdown when the temperature point is reached; except the cases requiring stopping the compressor such as fault protection, remote shutdown, mode switching etc.); In all modes: once the compressor stops, it will be allowed be restart after 3-minute delay (Note: The indoor units have a function of power memory, the machine can be restarted after remote shutdown and powering up again without delay).

1. Cooling mode

Start the machine to enter into cooling operation for cooling, the compressor is switched on.

2. Dehumidifying mode

Same as the cooling mode.

3. Fan mode

The compressor is switched off.

4. Heating mode

(1) Start the machine to enter into heating operation for heating, the compressor is switched on.

(2) Defrosting:

a. Defrosting starts: the compressor is shut down, and restarts it after 55-second delay.

b. Defrosting ends: the compressor stops, then starts it after 55-second delay.

(2) Outer Fans Control

Notes:

Only the outer fans run for at least 80s in each air flow speed can the air flow be switched.

After the outer fans run compulsively in high speed for 80s when the machine starts up, control the air flow according to the logic.

After remote shutdown, safety stops, and when the machine stops after reaching the temperature point, as well as after the compressor stops, extend 1 minute, the outer fans will stop (During the 1 minute period, the air flow of outer fans can be changed according to the outdoor ambient temperature changes); When running with force, the outdoor fans shall run in the highest air flow.

(3) 4-way valve control

1. The 4 way valve is energized in heat mode.

(4) Evaporator frozen-preventing protection function

At the mode of Cooling, dehumidifying:

Evaporator freez-preventing protection function can begin after 6 min of starting the compressor.

1. Starting estimation:

After the compressor stopped working for 180s, if $T_{inner\ pipe}$> [$T_{freeze\text{-}preventing\ frequency\text{-}limited\ temperature}$ (the temperature of hysteresis is 35.6ºF)], the machine is only allowed to start for operating, otherwise it should not be started, and should be stopped to treat according to the freeze-preventing protection: Clear the trouble under the mode of power turn-off / heating, and the protection times are not counted.

2. Frequency limited

[$T_{frozen\text{-}preventing\ normal\ speed\ frequency\text{-}reducing\ temperature}$] ≤[$T_{inner\ pipe\ T\ freeze\text{-}preventing\ frequency\text{-}limited\ temperature}$], you should limit the frequency raising of compressor.

3. Reducing frequency at normal speed:

If [$T_{freeze\text{-}preventing\ high\ speed\ frequency\text{-}reducing\ temperature}$] ≤[$T_{inner\ pipe\ T\ freeze\text{-}preventing\ normal\ speed\ frequency\text{-}reducing\ temperature}$], you should adjust the compressor frequency by reducing 8Hz/90s till the lower limit.

4. Reducing frequency at high speed:

If [$T_{freeze\text{-}preventing\ power\ turn\text{-}off\ temperature}$] ≤$T_{inner\ pipe}$ [$T_{freeze\text{-}preventing\ high\ speed\ frequency\text{-}reducing\ temperature}$] you should adjust the compressor frequency by reducing 30Hz/90s until reaching the lower limit.

5. Power turn-off:

If the $T_{inner\ pipe}$ <[$T_{freeze\text{-}preventing\ power\ turn\text{-}off\ temperature}$], then freeze-preventing protect to stop the machine; If T[$_{freeze\text{-}preventing\ frequency\text{-}limited\ temperature}$] <$T_{inner\ pipe}$, and the compressor has stopped working for 3 minutes, the whole machine should be allowed to operate.

6. If the freeze-preventing protection power turn-off continuously occurs six times, it should not be resumed automatically, and you should press the ON/OFF button to resume if the malfunction continues. During the process of running, if the running time of compressor exceeds the t evaporator freeze-preventing protection times zero clearing time, the times of freeze-preventing power turn-off should be cleared to recount. The mode of stopping the machine or transferring to supply air will clear the trouble times immediately (if the trouble can not be resumed, mode transferring will not clear it).

(5) Overload protection function

Overload protection function at the mode of Cooling and dehumidifying

1. Starting estimation:

After the compressor stops working for 180s, if $T_{outer\ pipe}$ <[$T_{Cooling\ overload\ frequency\text{-}limited\ temperature}$] (the temperature of hysteresis is 35.6ºF), the machine is allowed to start, otherwise it should not be started, and should be stopped to treat according to the overload protection: Clear the trouble at the mode of power turn-off / heating, and the protection times are not counted.

2. Frequency limited

If [$T_{Cooling\ overload\ frequency\text{-}limited\ temperature}$] ≤[$T_{outer\ pipe\ T\ Cooling\ overload\ frequency\ reducing\ temperature\ at\ normal\ speed}$], you should limit the frequency raising of compressor.

3. Reducing frequency at normal speed and power turn-off:

If [$T_{Cooling\ overload\ frequency\ reducing\ temperature\ at\ high\ speed}$] ≤$T_{outer\ pipe}$< [$T_{Cooling\ overload\ power\ turn\text{-}off\ temperature}$] , you should adjust the compressor frequency by reducing 8Hz/90s till the lower limit; After running 90s at the lower limit, if [$T_{Cooling\ overload\ frequency\ reducing\ temperature\ at\ normal\ speed}$]≤$T_{outer\ pipe}$, then Cooling overload protects machine stopping;

4. Reducing frequency at high speed and stop machine:

If [$T_{Cooling\ overload\ frequency\ reducing\ temperature\ at\ high\ speed}$]≤$T_{outer\ pipe}$ [$T_{Cooling\ overload\ power\ turn\text{-}off\ temperature}$], you should adjust the compressor frequency by reducing 30Hz/90s until reaching the lower limit; After running 90s at the lower limit, if [$T_{Cooling\ overload\ frequency\ reducing\ temperature\ at\ normal\ speed}$] ≤[$T_{outer\ pipe}$], then Cooling overload protects machine stopping.

5. Power turn-off:

If the [$T_{Cooling\ overload\ power\ turn\text{-}off\ temperature}$] ≤$T_{outer\ pipe}$, then Cooling overload protects machine stopping; if [$T_{outer\ pipe}$]<[$T_{Cooling\ overload\ frequency\text{-}limited\ temperature}$]and the compressor has stopped working for 3 minutes, the machine should operate.

6. If the Cooling overload protection power turn-off continuously occurs six times, it should not be resumed automatically, and you should press the ON/OFF button to resume if the malfunction continues. During the process of running, if the running time of compressor exceeds the t overload protection times zero clearing time, the times of overload protection power turn-off should be cleared to recount. The mode of stopping the machine or transferring to supply air will clear the trouble times immediately (if the trouble can not be resumed, transferring mode will not clear it).

Overload protection function at the mode of heating

Starting estimation :

After the compressor stopped working for 180s, if T inner pipe T heating overload frequency-limited temperature (the temperature of hysteresis is 35.6ºF), the machine is allowed to start, otherwise it should not be started, and should be stopped to treat according to the overload protection:

Clear the trouble at the mode of power turn-off / heating, and the protection times are not counted.

1. Frequency limited

If [$T_{heating\ overload\ frequency\text{-}limited\ temperature}$]≤$T_{inner\ pipe}$ <[$T_{heating\ overload\ frequency\ reducing\ temperature\ at\ normal\ speed}$] , you should limit the frequency raising of compressor.

2. Reducing frequency at normal speed and stopping machine:

If T[$_{heating\ overload\ frequency\ reducing\ temperature\ at\ normal\ speed}$]≤$T_{inner\ pipe}$<[$T_{heating\ overload\ frequency\ reducing\ temperature\ at\ high\ speed}$], you should adjust the compressor frequency by reducing 8Hz/90s until reaching the lower limit. After it was running 90s at the lower limit, if T heating overload frequency reducing temperature at normal speed ≤T inner pipe, then overload protects machine stopping.

3. Reducing frequency at high speed and power turn-off:

If [$T_{heating\ overload\ frequency\ reducing\ temperature\ at\ high\ speed}$]≤$T_{inner\ pipe}$<[$T_{heating\ overload\ power\ turn\text{-}off\ temperature}$], you should adjust the compressor frequency by reducing 30Hz/90s until reaching the lower limit. After it was running 90s at the lower limit, if T heating overload frequency reducing temperature at normal speed ≤T outer pipe, then Cooling overload protects machine stopping.

4. Power turn-off:

If the [$T_{heating\ overload\ power\ turn\text{-}off\ temperature}$] ≤$T_{inner\ pipe}$, then overload protects machine stopping. If T inner pipe T heating overload frequency-limited temperature and the compressor has stopped working for 3 minutes, the machine should be allowed to operate.

5. If the overload protection power turn-off continuously occurs six times, it should not be resumed automatically, and you should press the ON/OFF button to resume if the malfunction continues. During the process of running, if the running time of compressor exceeds the t overload protection times zero clearing time, the times of overload protection power turn-off should be cleared to recount. The mode of stopping the machine or transferring to supply air will clear the trouble times immediately (if the trouble can not be resumed, transferring mode will not clear it). Protective function for discharge temperature of compressor.

1. Starting estimation:

After the compressor stopped working for 180s, if $T_{Discharge}$ <$T_{Discharge\ limited\ temperature}$ (the temperature of hysteresis is 35.6ºF), the machine is allowed to start, otherwise it should not be started, and should be stopped to treat according to the discharge temperature:

The machine should be stopped or transferred to supply air, the trouble should be cleared immediately, and the protection times are not counted.

2. Frequency limited

If [$T_{Limited\ frequency\ temperature\ during\ discharging}$] ≤$T_{Discharge}$<[$T_{frequency\ reducing\ temperature\ at\ normal\ speed\ during\ discharging}$], you should limit the frequency raising of compressor.

3. Reducing frequency at normal speed and stopping machine:

If [$T_{frequency\ reducing\ temperature\ at\ normal\ speed\ during\ discharging}$] ≤$T_{Discharge}$<[$T_{frequency\ reducing\ temperature\ at\ high\ speed\ during\ discharging}$], you should adjust the compressor frequency by reducing 8Hz/90s until reaching lower limit; After running 90s at the lower limit, if [$T_{frequency\ reducing\ temperature\ at\ normal\ speed\ during\ discharging}$] ≤$T_{Discharge}$, you should discharge to protect machine stopping.

4. Reducing frequency at high speed and power turn-off:

If [$T_{frequency\ reducing\ temperature\ at\ high\ speed\ during\ discharging}$] ≤$T_{Discharge}$ <[$T_{Stop\ temperature\ during\ discharging}$], you should adjust the compressor frequency by reducing 30Hz/90s until reaching the lower limit. After it was running 90s at the lower limit, if [$T_{frequency\ reducing\ temperature\ at\ normal\ speed\ during\ discharging}$] ≤$T_{Discharge}$, you should discharge to protect machine stopping.

5. Power turn-off:

If the [$T_{Power\ turn\text{-}off\ temperature\ during\ discharging}$] ≤$T_{Discharge}$, you should discharge to protect machine stopping; If [$T_{Discharge}$]<[$T_{Limited\ frequency\ temperature\ during\ discharging}$] and the compressor has been stopped for 3 minutes, the machine should be allowed to operate.

6. If the discharging temperature protection of compressor continuously occurs for six times, it should not be resumed automatically, and you should press the ON/OFF button to resume. During the process of running, if the running time of compressor exceeds the t Protection times clearing of discharge, the discharge protection is cleared to recount. Stopped or transferred to supply air mode will clear the trouble times immediately (if the trouble can not be resumed, mode transferring also will not clear it).

7. Frequency limited

If [$I_{Limited\ frequency\ when\ overcurrent}$] ≤$I_{AC\ Electric\ current}$ <[$I_{frequency\ reducing\ when\ overcurrent}$], you should limit the frequency raising of compressor.

8. Reducing frequency:

If [$I_{Frequency\ reducing\ when\ overcurrent}$] ≤[$I_{AC\ Electric\ current}$ I Power turn-off when overcurrent], you should reduce the compressor frequency until reaching the lower limit or exit the frequency reducing condition.

9. Power turn-off:

If [$I_{Power\ turn\text{-}off\ machine\ when\ overcurrent}$] ≤[$I_{AC\ Electric\ current}$] , you should carry out the overcurrent stopping protection; If I $_{AC\ Electric\ current}$<[$T_{Limited\ frequency\ when\ overcurrent}$] and the compressor has been stopped for 3 minutes, the machine should be allowed to operate.

10. If the overcurrent protection continuously occurs for six times, it should not be resumed automatically, and you should press the ON/OFF button to resume. During the process of running, if the running time of compressor exceeds the [$t_{Protection\ times\ clearing\ of\ over\ current}$], the discharge protection is cleared to recount.

(6)Voltage sag protection

After starting the compressor, if the time of DC link Voltage sag [$U_{Sagging\ protection\ voltage}$] is measured to be less than t Voltage sag protection time, the machine should be stopped at once, hand on the voltage sag trouble, reboot automatically after 30 minutes.

(7)Communication fault

When you have not received any correct signal from the inner machine in 3 minutes, the machine will stop for communication fault. When you have not received any correct signal from driver IC (aim to the controller for the separating of main control IC and driver IC), and the machine will stop for communication fault. If the communication is resumed, the machine will be allowed to operate.

(8)Mode protection

Testing the mode protective signal immediately after started, once the mode protective signal is measured, stop the machine with mode protection immediately. If the mode protection is resumed, the machine will be allowed to operate. If the mode protection continuously occurs for three times, it should not be resumed automatically, and you should press the ON/OFF button to resume. If the running time of compressor exceeds the [$t_{Protection\ times\ clearing\ of\ module}$] , the mode protection is cleared to recount.

(9)Mode overheating protection

1. Starting estimation:

After the compressor stopped working for 180s, if T_{Module}<[$T_{Module\ frequency\ limited\ temperature}$](the temperature of hysteresis is 35.6ºF), the machine is allowed to start, otherwise it should not be started, and should be stopped to treat according to the mode overheating protection: The machine should be stopped or transferred to supply air, the trouble should be cleared immediately, and the protection times are not counted.

2. Frequency limited

If [$T_{Limited\ frequency\ temperature\ of\ module}$] ≤$T_{Module}$ <[$T_{frequency\ reducing\ temperature\ at\ normal\ speed\ of\ module}$] , you should limit the frequency raising of compressor.

3. Reducing frequency at normal speed and power turn-off:

If [$T_{frequency\ reducing\ temperature\ at\ normal\ speed\ of\ module}$] ≤$T_{Module}$<[$T_{frequency\ reducing\ temperature\ at\ high\ speed\ of\ module}$], you should adjust the compressor frequency by reducing 8Hz/90s until reaching the lower limit. After it was running 90s at the lower limit, if [$T_{frequency\ reducing\ temperature\ at\ normal\ speed\ of\ module}$] ≤T Mode, you should stop the machine for mode overheating protection.

4. Reducing frequency at high speed and power turn-off:

If [$T_{frequency\ reducing\ temperature\ at\ high\ speed\ of\ module}$]≤$T_{Module}$ <[$T_{Power\ turn\text{-}off\ temperature\ of\ module}$] you should adjust the compressor frequency by reducing 30Hz/90s until reaching the lower limit; After it was running 90s at the lower limit, if [$T_{frequency\ reducing\ temperature\ at\ normal\ speed\ of\ module}$] ≤$T_{Module}$, you should stop the machine for mode overheating protection.

5. Power turn-off:

If the [$T_{Power\ turn\text{-}off\ temperature\ of\ module}$] ≤$T_{Module}$, you should stop the machine for mode overheating protection. If T_{Module} <[$T_{Limited\ frequency\ temperature\ of\ module}$] and the compressor has been stopped for 3 minutes, the machine should be allowed to operate.

6. If protection continuously occurs for six times, it should not be resumed automatically, and you should press the ON/OFF button to resume. During the process of running, if the running time of compressor exceeds the [$t_{Protection\ times\ clearing\ of\ module}$] , the discharge protection is cleared to recount. Stopped or transferred to supply air mode will clear the trouble times immediately (if the trouble can not be resumed, mode transferring also will not clear it).

(10)Compressor overloads protection

If you measure the compressor overload switch action in 3s, the compressor should be stopped for overloading. The machine should be allowed to operate after overload protection was measured to resume. If the overloading protection continuously occurs for three times, it should not be resumed automatically, and you should press the ON/OFF button to resume. The protection times of compressor is allowed to clear after the compressor run [$t_{Protection\ times\ clearing\ of\ compressor\ overloading}$] 30 minutes.

(11)Phase current overcurrent protection of compressor

During the running process of compressor, you could measure the phase current of the compressor, and control it according to the following steps:

1. Frequency limited

If [$I_{Limited\ frequency\ phase\ current}$] ≤[$I_{Phase\ current\ T\ frequency\ reducing\ phase\ current}$] , you should limit the frequency raising of compressor.

2. Reducing Frequency

If [$I_{Frequency\ Reducing\ Phase\ Current}$]≤I Phase Current<[$I_{Power\ Turn\text{-}Off\ Phase\ Current}$], the compressor shall continue to reduce frequency till the lowest frequency limit or out of the condition of reducing frequency;

3. Power turn-off

If [$I_{Phase\ Current}$]≥[$I_{Power\ Turn\text{-}Off\ Phase\ Current}$], the compressor phase current shall stop working for overcurrent protection; if [$I_{Phase\ Current}$]≤[$I_{Frequency\ Reducing\ Phase\ Current}$], and the compressor have stopped working for 3 min, the machine shall be allowed to operate;

4. If the overcurrent protection of compressor phase current continuously occurs for six times, it should not be resumed automatically, and you should press the ON/OFF button to resume. During the process of running, if the running time of compressor exceeds the [$t_{Clearing\ Time\ of\ Compressor\ Phase\ Current\ Times}$] , the overcurrent protection is cleared to recount.

(12) Starting-up Failure Protection for Compressor

Stop the compressor after its starting-up fails, restart it after 20s if the fault doesn't shows, and if they are all failing for the successive start 3 times, it shall be reported as Starting-up Failure, and then restart up it after 3 min. When it still not be able to operate through carry out the above process for 5 times, it is available if press ON/OFF. And the compressor should be cleared the times after it run 2 min.

(13) Out-of-Step Protection for Compressor

The out-of-step protection signal should be detected immediately after starting-up compressor, and once find the out-of-step protection signal, the out-of-step protection shall be stopped; if it can run for lasting power turn-off 3 min, the machine shall be allowed to operate. If it still can't run automatically when the out-of-step protection for compressor happens to stop working for 6 times in succession, it needs to press ON/OFF to operate. And if the running time is more than 10 min, the power turn-off times for out-of-step protection shall be cleared and recounted.

(14) Voltage Abnormity Protection for DC Bus

To detect voltage abnormity protection for dc bus after completing the pre-charge:

1.Over-High Voltage Protection for DC Bus:

If it found the DCbus voltage U_{DC} >[$UDC_{\text{Jiekuangchun Protection}}$], turn off PFC and stop the compressor at once, and it shall show the DC over-high voltage failure; it should clear out the failure when the voltage dropped to U_{DC} <[$UDC_{\text{Jiekuangchun Recovery}}$] and the compressor stopped for 3 min.

2.Over-Low Voltage Protection for DC Bus:

If it found the DC bus voltage U_{DC} <[$U_{\text{DC Wantuochun Protection}}$], turn off PFC and stop the compressor at once, and it shall show the DC over-low voltage; and it should clear out the failure when the voltage raised to U_{DC} >[$U_{\text{DC Wantuochun Recovery}}$] and the compressor stopped for 3 min.

3.To detect voltage abnormity protect for DC bus when getting electricity:

If it found the DC bus voltage U_{DC} >[$U_{\text{DC——Over-High Voltage}}$], turn off the relay at once, and shows voltage abnormity failure for DC Bus. And the failure can't recover except to break off and get the electricity.

(15)Abnormity Protection for Four-way Valve

Under the mode of heating operation in good condition: the compressor is detected [$T_{\text{Inner Tube}}$ <($T_{\text{Inner Ring}}$-$T_{\text{Abnormity Temperature Difference For Four-Way Valve Reversion}}$)], during the running, it should be regarded as four-way valve reversion abnormity. And then it can run if stop the reversion abnormity protection for four-way valve 3 min; and if it still can't run when the reversion abnormity protection for four-way valve happens to stop working for 3 times in succession, it is available if presses ON/OFF.

Attention: the protection shall be shielded during the testing mode and defrosting process, and it should clear out the failure and its times immediately when turning off or delivering air / cooling / dehumidifying mode conversed (the inverted mode doesn't clear out the failure when it can't recover to operate).

(16) PFC Protection

1. After start up the PFC, it should detect the protection signal of PFC immediately; under the condition of PFC protection, it should turn off the PFC and compressor at one time;
2. It shows the failure is cleared out if PFC Protection stopped working 3 min and recovers to run automatically;
3. If it still can't run when it occurs PFC protection for 3 times in succession, it is available if pressing ON/OFF; and clearing the PFC Protection times when starting up PFC for 10min.

(17) Failure Detection for Sensor

1. Outdoor Ambient Sensor: detect the failure of sensor at all times.
2. Outdoor Tube Sensor: You should not detect the failure of outdoor tube sensor within 10 minutes heating operation compressor except the defrosting, and you could detect it at other time.
3. Outdoor Exhaust Sensor:

(a) The compressor only detect the sensor failure after it start up 3 min in normal mode;

(b) It should detect the exhaust sensor failure immediately in the testing mode.

4. Module Temperature Sensor:

(a) Short-Circuit Detection: the compressor should be detected immediately when the mode temperature sensor short-circuits.

(b) Open-Circuit Detection: the compressor should be detected on open-circuit when it runs 3min (it needn't 30s avoiding the module from over-heating).

(c) Detect the sensor failure at all times in the testing mode.

5. Disposal for Sensor Protection

(1) When the short-circuit of sensor is detected within 30s, it is regarded as the temperature of sensor over-high (or infinitely high), and now according to the over-high sensor, the machine should carry out the corresponding protection to stop working, and show the corresponding temperature shutdown protection and sensor failure at the same time (for example: the compressor stops immediately when the outdoor tube sensor short-circuits, and the machine shall show the overload protection and outdoor tube sensor failure).

(2) When the open-circuit of sensor is detected within 30s, the protection stops and it shall show the corresponding sensor failure.

6. Electric Heating Function of Chassis

(1) When Toutdoor amb.≤32ºF , the electric heating of chassis will operate;

(2) When Toutdoor amb.>35.6ºF , the electric heating of chassis will stop operation;

(3)When 32ºF <Toutdoor amb.≤35.6ºF, the electric heating of chassis will keep original status.

7. Electric Heating Function of Compressor

(1) When Toutdoor amb.≤≤23ºF , compressor stops operation, while the electric heating of compressor starts operation;

(2) When Toutdoor amb.>28.4ºF , the electric heating of compressor stops operation;

(3) When 23ºF <Toutdoor amb.≤28.4ºF , the electric heating of compressor will keep original status.

7. Wired Zone Controller

If the product is equipped with a wired zone controller, please refer to the following descriptions of wired zone controller.

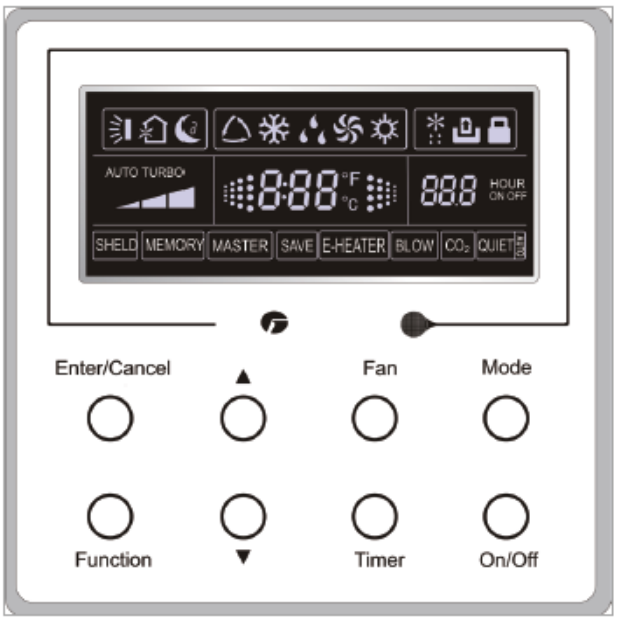

Fig1.1.1 Outline of wired zone controller

7.1 LCD Display of Wired Zone Controller

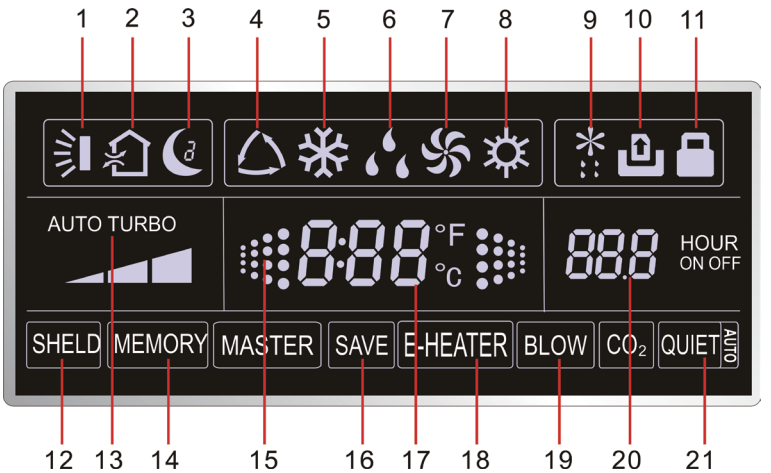

Fig.1.1.2 LCD display

7.2 Description of LCD Display

No.	Symbols	Description
1		Swing function
2		Air exchange function (this function is currently unavailable for this unit)
3		Sleep function (Only sleep 1)
4		Each kind of running mode of indoor unit (auto mode)
5		Cooling mode
6		Dry mode
7		Fan mode
8		Heating mode
9		Defrosting function for the outdoor unit
10		Gate-control function (this function is currently unavailable for this unit)

11		Lock function
12	SHIELD	Shield functions (Button operation, temperature setting, On/Off operation,Mode setting are disabled by the remote monitoring system.)
13	TURBO	Turbo function state
14	MEMORY	Memory function (The indoor unit resumes the original setting state after power failure and then power recovery)
15		It blinks under on state of the unit without operation of any button
16	SAVE	Energy-saving function
17		Ambient/setting temperature value
18	E-HEATER	Electric auxiliary heating function(this function is yet unavailable for this unit)
19	BLOW	Blow function
20		Timing value
21	QUIET	Quiet function (two types: quiet and auto quiet)(this function is yet unavailable for this unit).

2 Buttons

2.1 Layout of Buttons

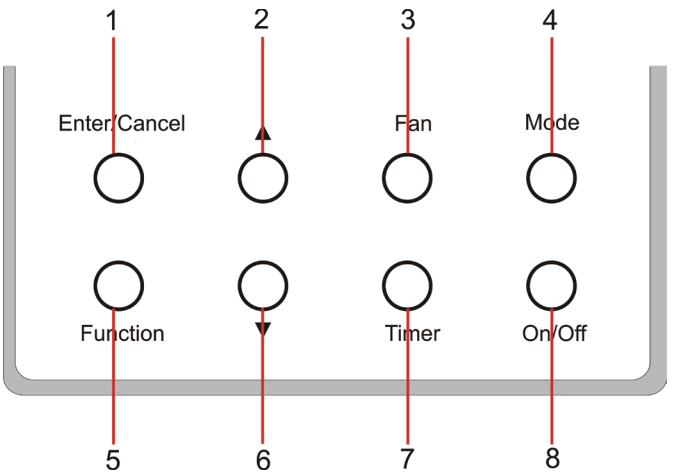

2.2 Functions of Buttons

No.	Name	Function
1	Enter/Cancel	Function selection and cancellation.
2	▲	① Running temperature setting of the indoor unit, range:16~30°C. ② Timer setting, range:0.5-24 hr.
6	▼	
3	Fan	Setting of the high/middle/low/auto fan speed.
4	Mode	Setting of the Cooling/Heating/Fan/Dry/Auto mode of the indoor unit.
6	Function	Switchover among the functions of Turbo/Save/E-heater/Blow etc.
7	Timer	Timer setting.
8	On/Off	Turn on/off the indoor unit.
4+2	▲+Mode	Press them for 5s under off state of the unit to enter/cancel the Memory function(If memory is set, indoor unit after power failure and then power recovery will resume the original setting state. If not, the indoor unit is defaulted to be off after power recovery. Memory off is default before delivery.).
3+6	Fan+▼	By pressing them at the same time under off state of the unit, ❄ will be displayed on the wired controller for the cooling only unit, while ☼ will be displayed on the wired controller for the cooling and heating unit.
2+6	▲+▼	Upon startup of the unit without malfunction or under off state of the unit,press them at the same time for 5s to enter the lock state, in which case,any other buttons won't respond the press. Repress them for 5s to quit this state.

3 Operation Instructions

3.1 On/Off

Press On/Off to turn on the unit and turn it off by another press.

Note: The state shown in Fig.3.1.1 indicates the “Off” state of the unit after power on. The state shown in Fig.3.1.2 indicates the “On” state of the unit after power on.

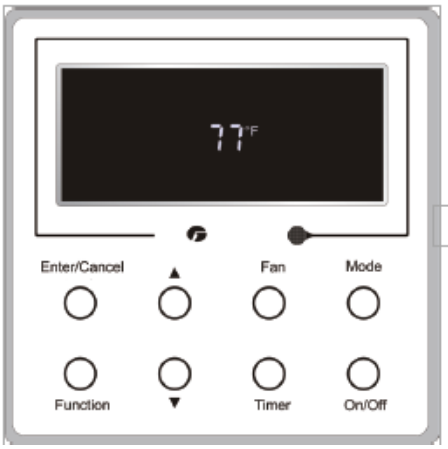

Fig.3.1.1 “Off” State

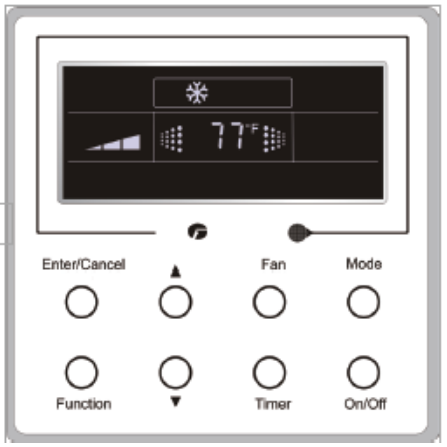

Fig.3.1.2 “On” State

3.2 Mode Setting

Under ON state of the unit, press the Mode to switch the operation modes as the following sequence: Auto–Cooling–Dry–Fan–Heating.

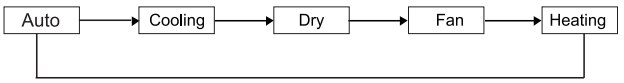

3.3 Temperature Setting

Press ▲or ▼ to increase/decrease the preset temperature. If pressing either of them continuously, the temperature will be increased or decreased by 1°C every 0.5s,as shown in Fig.3.3.1.

In the Cooling, Dry, Fan or Heating mode, the temperature setting range is 16~30°C(61~86°F).

In the Auto mode, the setting temperature is unadjustable.

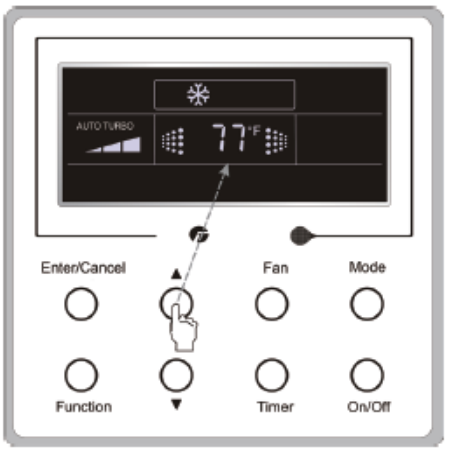

Fig.3.3.1

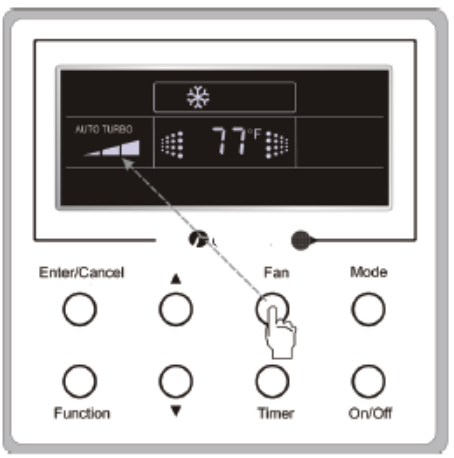

Fig.3.4.1

3.4 Fan Setting

Under the “On” state of the unit, press Fan and then fan speed of the indoor unit will change circularly as shown in Fig.3.4.1.

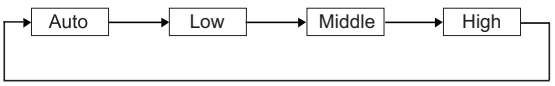

3.5 Timer Setting

Under on-state of the unit, Press Timer button to set timer off of the unit. Under off-state of the unit, press Timer button to set timer on of the unit in the same way.

• Timer on setting:

Under off-state of the unit without timer setting, if Timer button is pressed, LCD will display xx.Hour,with ON blinking. In this case, press▲ or ▼ button to adjust timer on and then press Timer to confirm.

• Timer off setting:

Under on-state of the unit without timer setting, if Timer button is pressed, LCD will display xx. Hour,with OFF blinking. In this case, press▲ or ▼ button to adjust timer on and then press Timer to confirm.

• Cancel timer:

After setting of timer, if Timer button is pressed, LCD won't display xx. Hour so that timer setting is canceled.

Timer off setting under the "On" state of the unit is shown here in Fig.3.5.1.

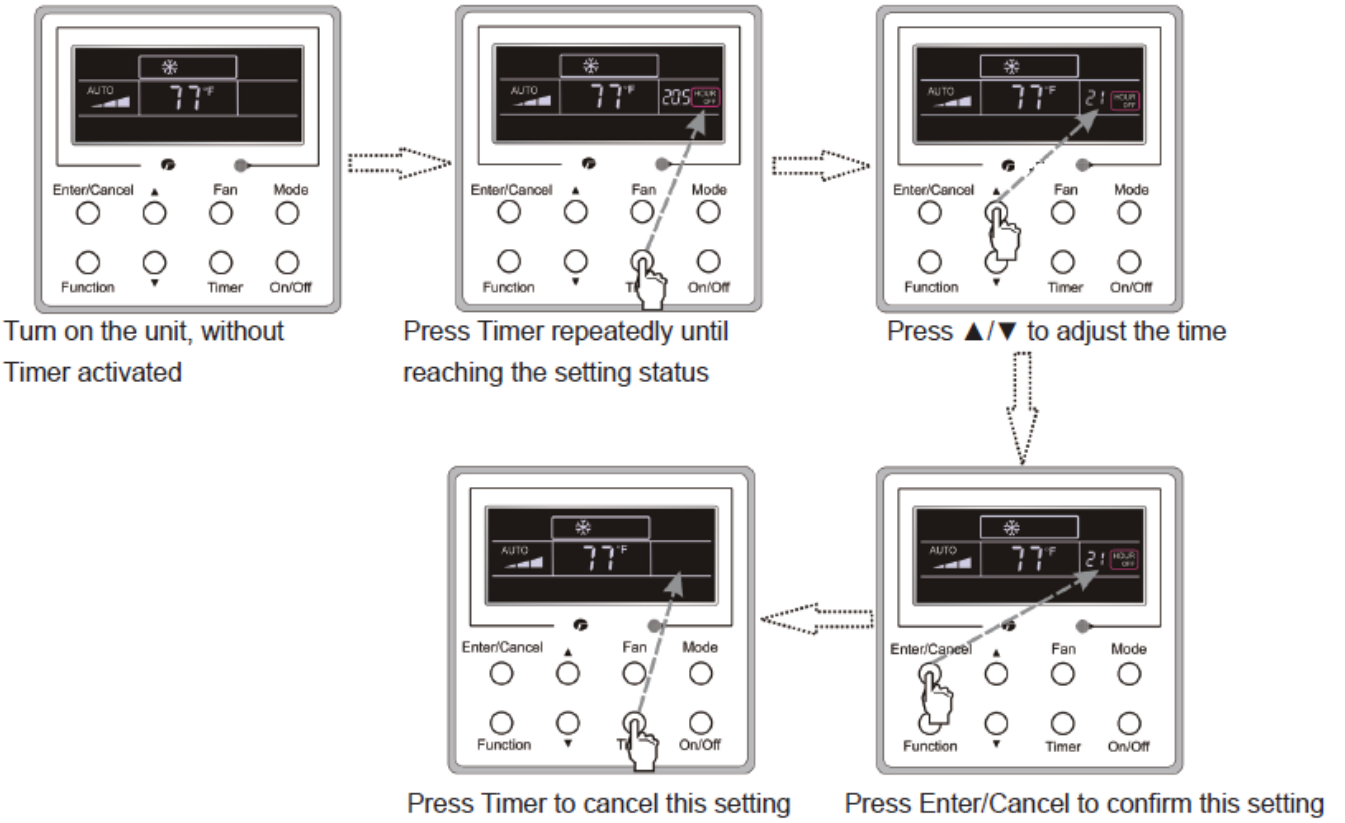

Timer on setting under the "Off" state of the unit is shown in Fig.3.5.2.

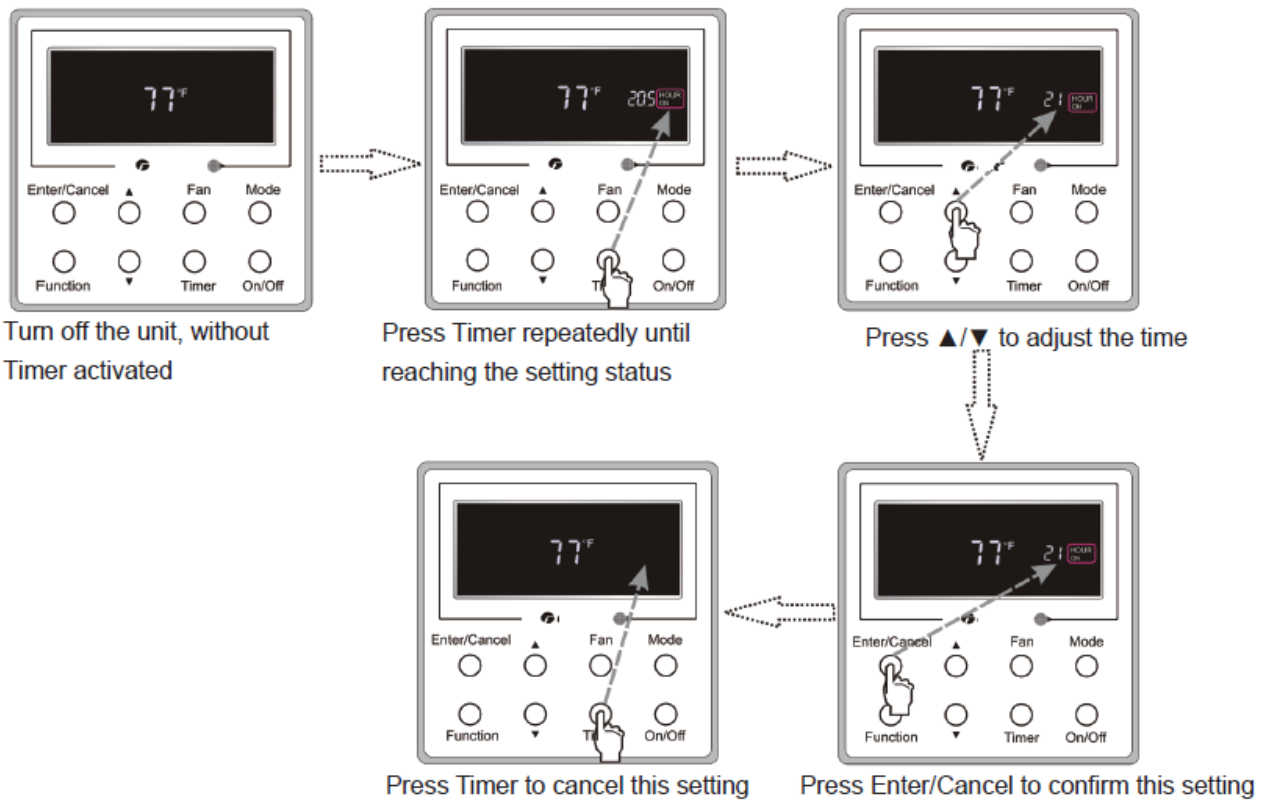

Fig.3.5.2 Timer on Setting under the "Off" State of the Unit

Timer range: 0.5-24hr. Every press of ▲or ▼ will make the set time increased or decreased by 0.5hr. If either of them is pressed continuously, the set time will increase/ decrease by 0.5hr every 0.5s.

3.6 Swing Setting

Swing On: Press Function under on state of the unit to activate the swing function. In this case, will blink,After that,press Enter/Cancel to make a confirmation.

Swing Off: When the Swing function is on, press Function to enter the Swing setting interface,with blinking. After that, press Enter/Cancel to cancel this function. Swing setting is shown below in Fig.3.6.1.

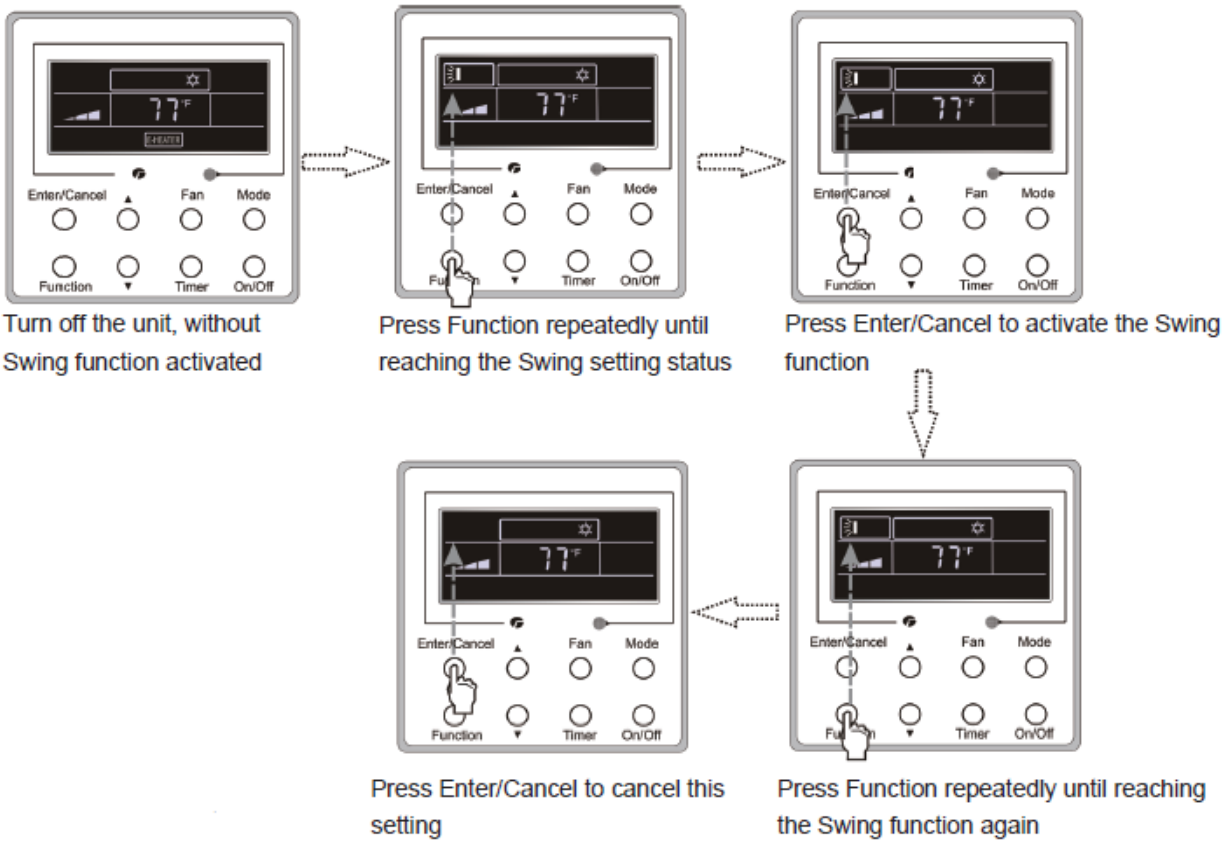

Fig. 3.6.1 Swing Setting

Notes:

(1)Sleep, Turbo or Blow setting is the same as the Swing setting.

(2)After the setting has been done, it has to press the key “Enter/Cancel” to back to the setting status or quit automatically five seconds later.

3.7 Sleep Setting

Sleep on: Press Function under the On state of the unit till the unit enters the Sleep setting state. After that, press Enter/Cancel to confirm this setting.

Sleep off: When the Sleep function is activated, press Function to enter the Sleep setting status. After that, press Enter/Cancel to cancel this function.

In the Cooling or Dry mode, the temperature will increase by 1°C(1~2°F) after the unit runs under Sleep1 for 1hr and 1°C(1~2°F) after another 1hr.After that, the unit will run at this temperature.

In the Heating mode, the temperature will decrease by 1°C(1~2°F) after the unit runs under Sleep 1 for 1hr and 1°C(1~2°F) after another 1hr. After that, the unit will run at this temperature.

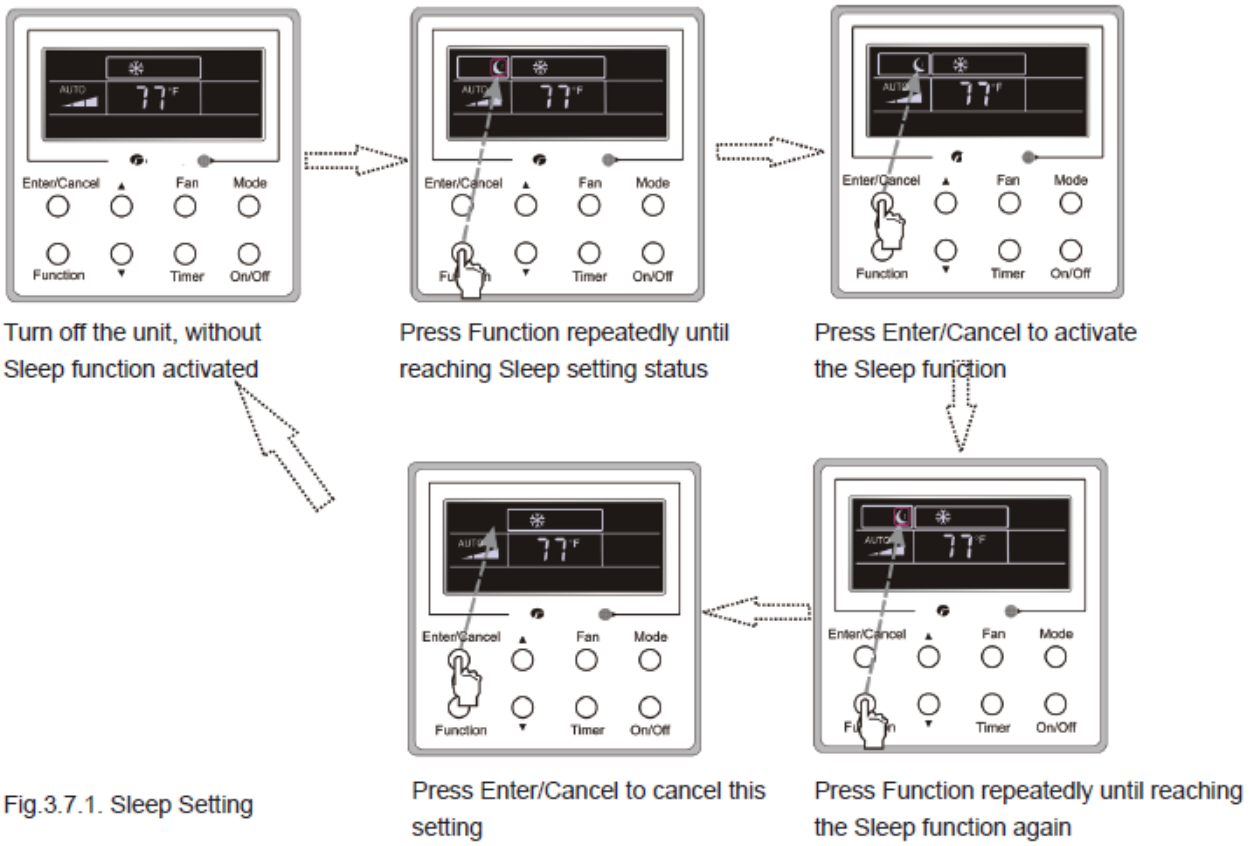

Fig.3.7.1. Sleep Setting

3.8 Turbo Setting

Turbo function: The unit at the high fan speed can realize quick cooling or heating so that the room temperature can quickly approach the setting value.

In the Cooling or Heating mode, press Function till the unit enters the Turbo setting status and then press Enter/Cancel to confirm the setting.

When the Turbo function is activated, press Function to enter the Turbo setting status and then press Enter/Cancel to cancel this function.

Turbo function setting is as shown below in Fig.3.8.1.

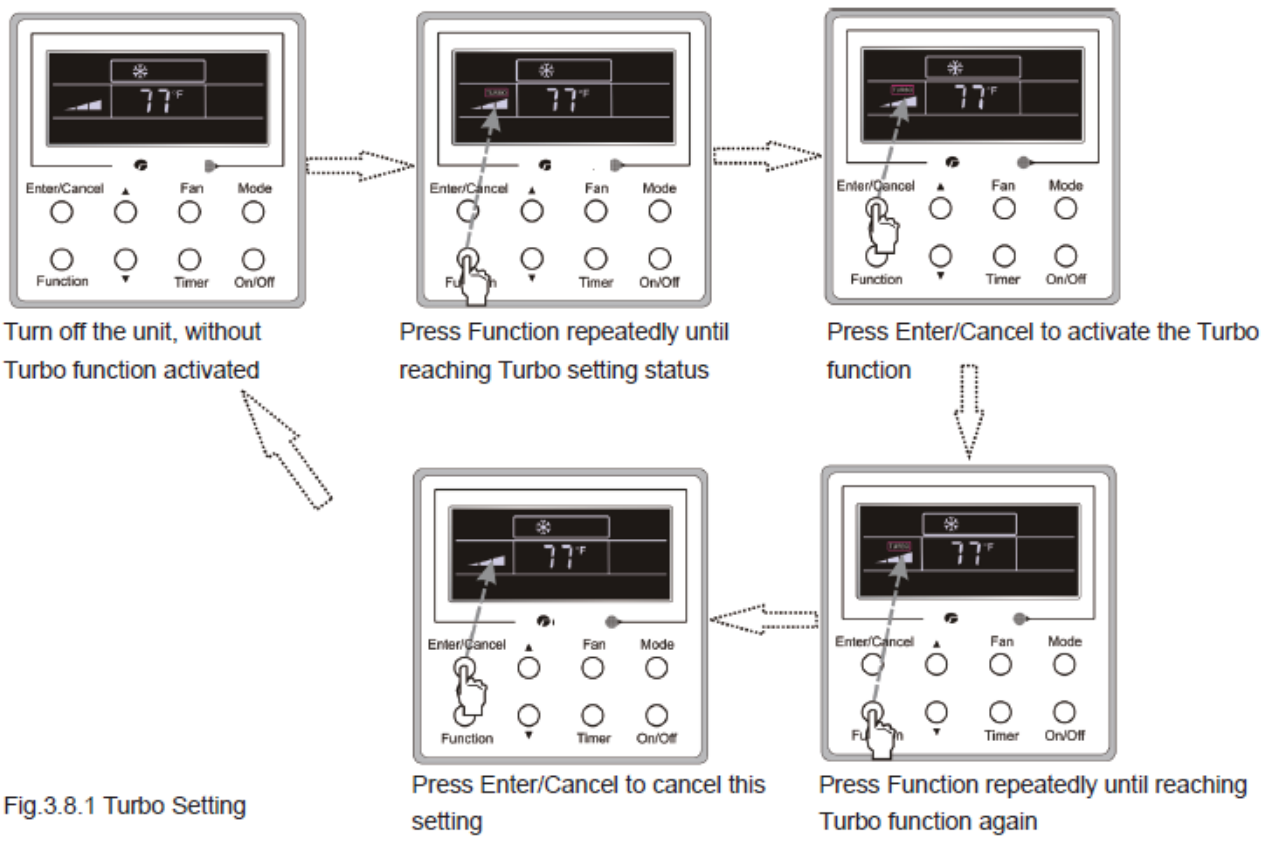

Fig.3.8.1 Turbo Setting

3.9 Blow Setting

Blow function: After the unit is turned off, the water in evaporator of indoor unit will be automatically evaporated to avoid mildew.

In the Cooling or Dry mode, press Function till the unit enters the Blow setting status and then press Enter/Cancel to active this function.

When the Blow function is activated, press Function to the Blow setting status and then press Enter/Cancel to cancel this function. Blow function setting is as shown below.

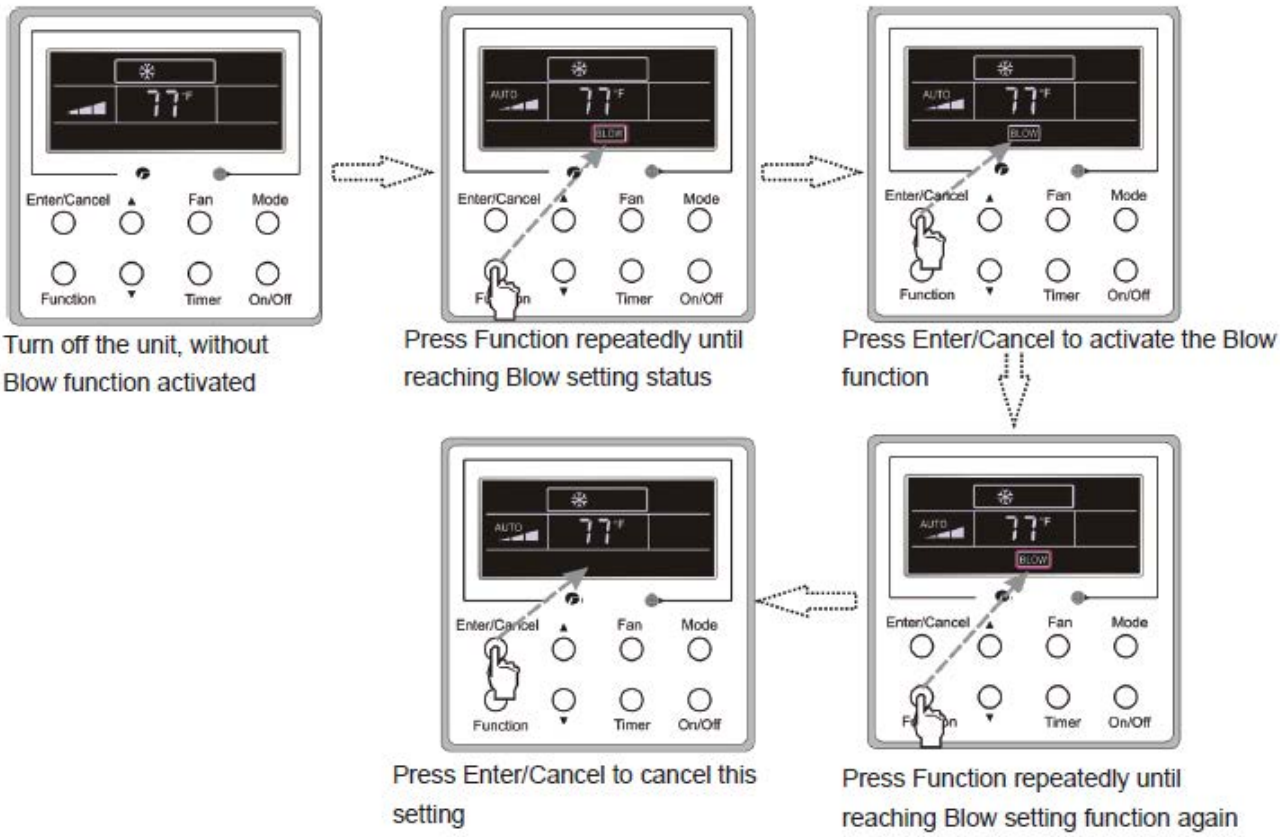

Notes:

(1)When the Blow function is activated, if turning off the unit by pressing On/Off or by the remote controller, the indoor fan will run at the low fan speed for 2 min, with “BLOW” displayed on the LCD. While, if the Blow function is deactivated, the indoor fan will be turned off directly.

(2)Blow function is unavailable in the Fan or Heating mode.

3.10 Other Functions

a. Lock

Upon startup of the unit without malfunction or under the “Off” state of the unit, press ▲ and ▼ at the same time for 5s till the wired controller enters the Lock function. In this case, LCD displays .

After that, repress these two buttons at the same time for 5s to quit this function.

Under the Lock state, any other button press won’t get any response.

b. Memory

Memory switchover: Under the “Off” state of the unit, press Mode and ▲ at the same time for 5s to switch memory states between memory on and memory off. When this function is activated, Memory will be displayed. If this function is not set, the unit will be under the “Off” state after power failure and then power recovery.

Memory recovery: If this function has been set for the wired controller, the wired controller after power failure will resume its original running state upon power recovery. Memory contents: On/Off, Mode, set temperature, set fan speed and Lock function.

4. Installation and Dismantlement

4.1 Connection of the Signal Line of the Wired Controller

- Open the cover of the electric control box of the indoor unit.
- Let the single line of the wired zone controller through the rubber ring.
- Connect the signal line of the wired zone controller to the 4-pin socket of the indoor unit PCB.
- Tighten the signal wire with ties.
- The communication distance between the mainboard and the wired zone controller can be up to 20 meters (the standard distance is 8 meters).

4.2 Installation of the Wired Zone Controller

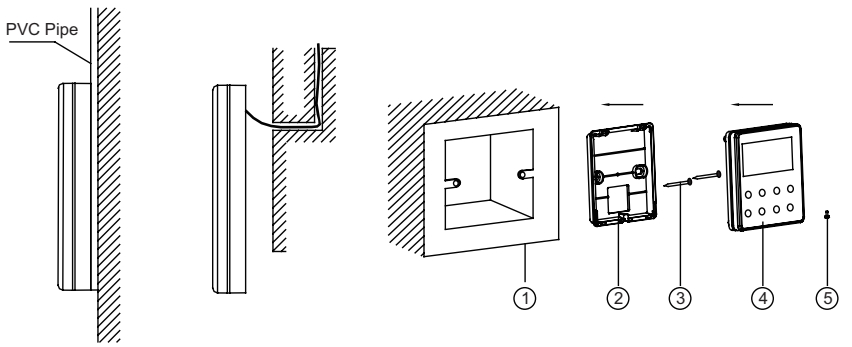

Fig.4.1 Accessories for the Installation of the Wired Zone Controller

No.	1	2	3	4	5
Name	Socket box embedded in the wall	Soleplate of the Wired Zone Controller	Screw M4X25	Front Panel of the Wired Zone Controller	Screw ST 2.9X6

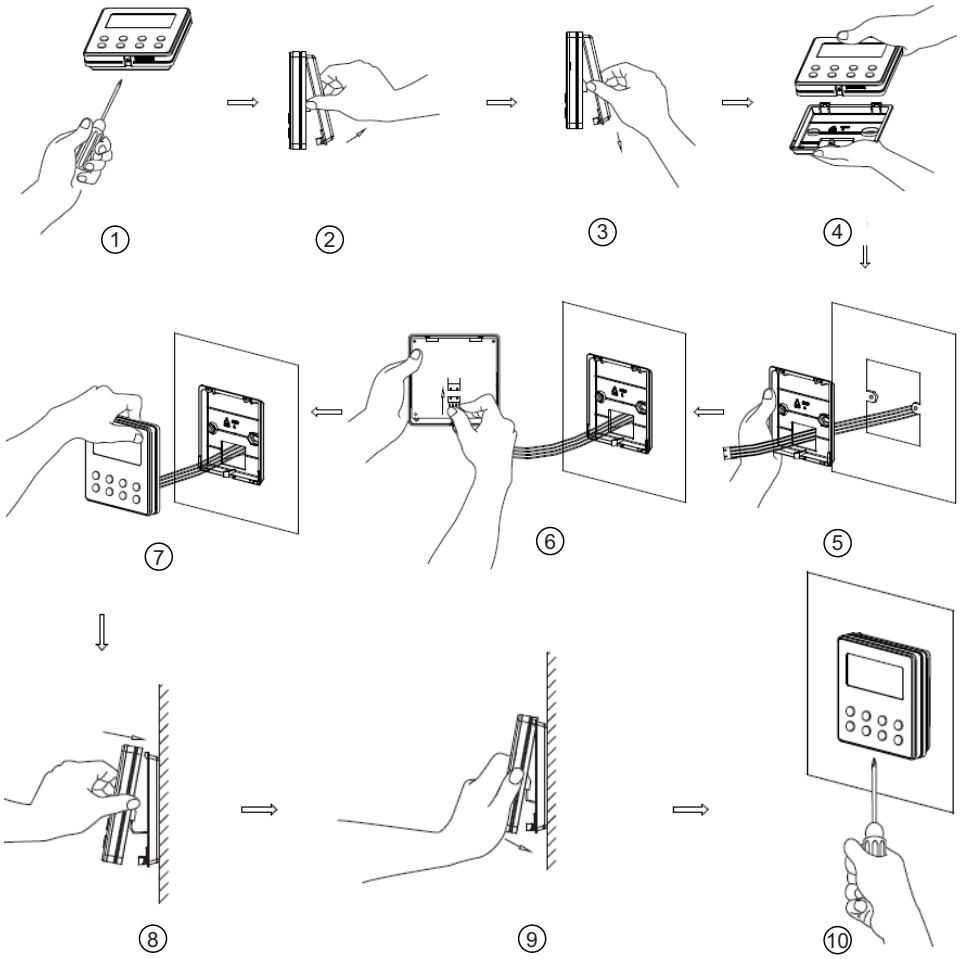

Fig.4.2

Fig.4.2

Fig.4.2 shows the installation steps of the wired controller, but there are some issues that need your attention.

(1) Prior to the installation, please firstly cut off the power supply of the wire buried in the installation hole, that is, no operation is allowed with electricity during the whole installation.

(2) Pull out the four-core twisted pair line from the installation holes and then let it go through the rectangular hole behind the soleplate of the wired controller.

(3) Stick the soleplate of the wire controller to the wall over the installation hole and then fix it with screws M4X25.

(4) Insert the four-core twisted pair line into the slot of the wired zone controller and then buckle the front panel and the soleplate of the wired zone controller together.

(5) Finally, fix the front panel and the soleplate of the wired zone controller tightly with screws ST2.9X6.

⚠CAUTION!

Please pay special attention to the followings during the connection to avoid the malfunction of the air conditioning unit due to electromagnetic interference.

(1) Separate the signal and communication lines of the wired controller from the power cord and connection lines between the indoor and outdoor unit, with a minimum interval of 20cm, otherwise the communication of the unit will probably work abnormally.

(2) If the air conditioning unit is installed where vulnerable to electromagnetic interference, then the signal and communication lines of the wired zone controller must be shielded communication cable.

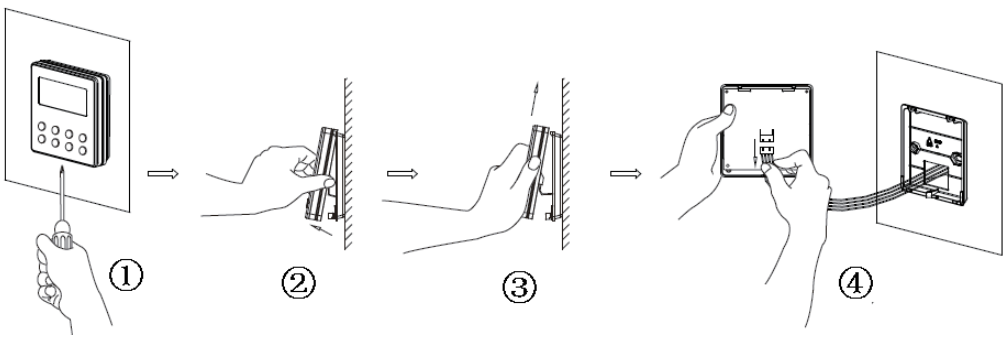

5 Errors Display

If there is an error occurring during the operation of the system, the error code will be displayed on the LCD, as show in Fig.5.1. If multiple errors occur at the same time, their codes will be displayed sequentially.

Note: In event of any error, please turn off the unit and contact a certified technician.

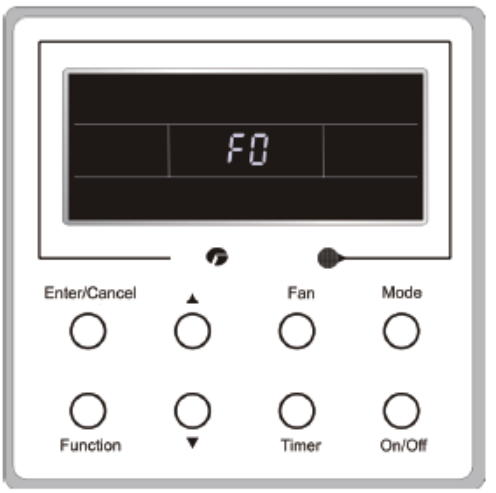

Fig.5.1

8. Maintenance

8.1 Precautions before Maintenance

There are high-capacity electrolytic capacitors on the outdoor mainboard. Thus, even if the power is cut off, there is high voltage inside the capacitors and it needs more than 20 min. to reduce the voltage to safety value. Touching the electrolytic capacitor within 20 min. after cutting the power will cause electric shock. If maintenance is needed, follow the steps below to discharge electricity of electrolytic capacitor after power off.

(1) Open the top cover of outdoor unit and then remove the cover of the electric box.

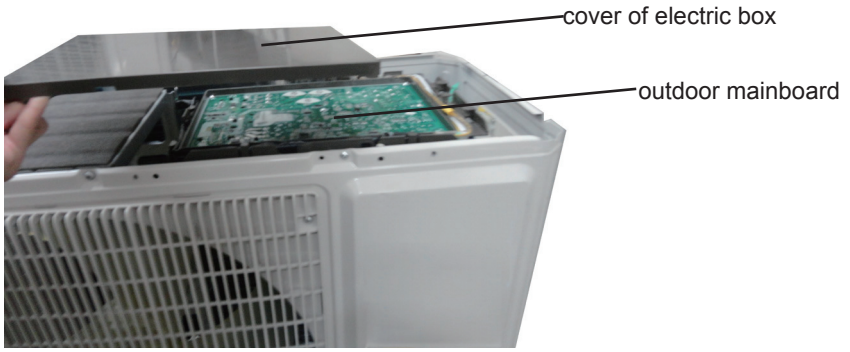

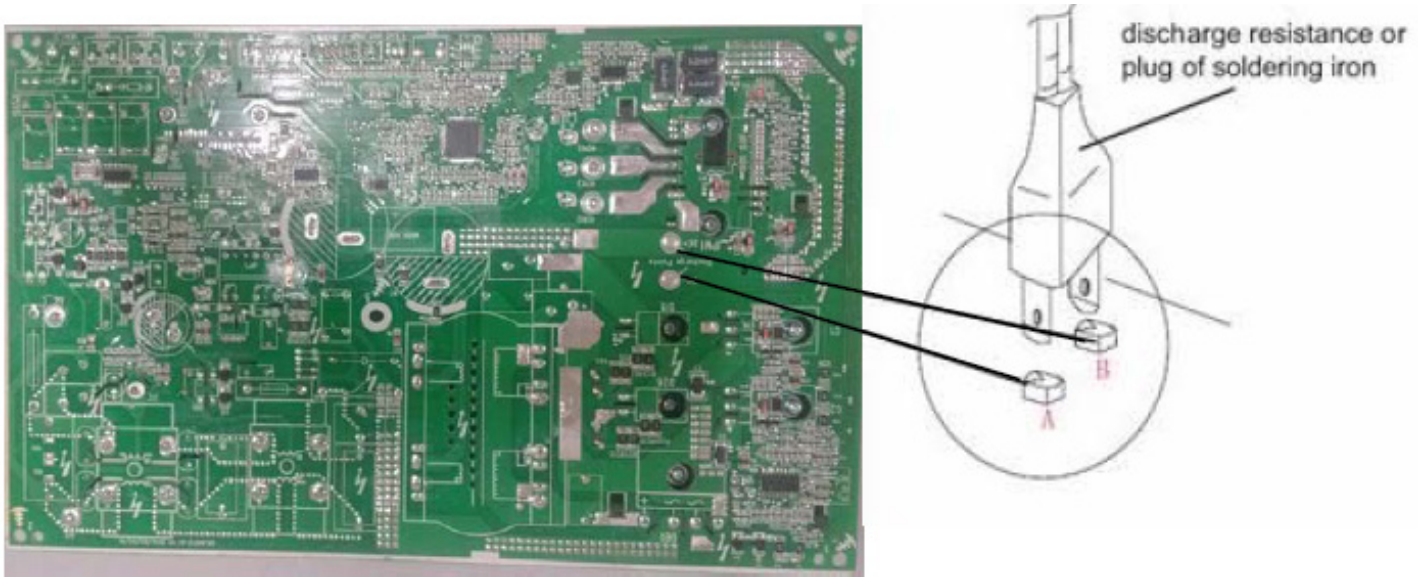

8.2 Error Code List

Name of malfunction	Display of indoor unit	Display of lamp (the times of blinking)					
		Indoor			Outdoor		
		R	C	H	Y	R	G
Anti-freezing protection	E2	2			3		
Block or Low pressure of refrigerant system	E3	3				9	
Compressor exhaust high temperature protection	E4	4			7		
AC over-current protection	E5	5			5		
Communication failure between indoor unit and outdoor unit	E6	6					O/U
Anti-high temperature protection	E8	8			6		
	H4			4	6		
No feedback of indoor fan motor	H6	11					
Jumper cap malfunction protection	C5	15					
Indoor unit and outdoor unit doesn't match	LP	19			16		
Outdoor DC fan motor malfunction	L3	23				14	
Power protection	L9	20			9		
Gathering refrigerant	Fo	1	1				
Indoor ambient sensor open or short circuit	F1		1				
Indoor tube sensor open or short circuit	F2		2				
Outdoor ambient sensor open or short circuit	F3		3			6	
Outdoor tube sensor open or short circuit	F4		4			5	
Exhaust sensor open or short circuit	F5		5			7	
Overload limit / drop frequency	F6		6			3	
Over current limit / drop frequency	F8		8			1	
High exhaust temperature limit / drop frequency	F9		9			2	
Refrigerant leakage protection	F0		10			9	
Anti-freezing limit / drop frequency	FH		2	2		4	
Defrosting	H1			1	2		
Compressor overload protection	H3			3	8		
IPM protection	H5			5	4		
Module temperature is too high	H5			5	10		
PFC protection	HC			6	14		
Loading EEPROM malfunction	EE			15	11		
High PN voltage protection	PH		11		13		
Low PN voltage protection	PL			21	12		
4-way valve reversal abnormal	U7		20				
DRED1 / DRED2 / DRED3	d1/d2/d3						
Compressor Min frequence in test state	P0						
Compressor rated frequence in test state	P1						
Compressor maximum frequence in test state	P2						
Compressor intermediate frequence in test state	P3						
Compressor is running(normal)					1		
The temperature for turning on the unit is reached(normal)						8	
Frequency limiting (module temperature)	EU		6	6		11	
Frequency limiting (power)	LU		24			13	

Notes: R(Indoor)--Running C--Cooling H--Heating Y--Yellow R(Outdoor)--Red G--Green
O/U--OFF or Unblink The display difference between Fo and F0 is 'o' is the bottom part of figure 8

8.3 Troubleshooting for Main Malfunction

●Indoor unit:

1. Malfunction of Temperature Sensor F1, F2

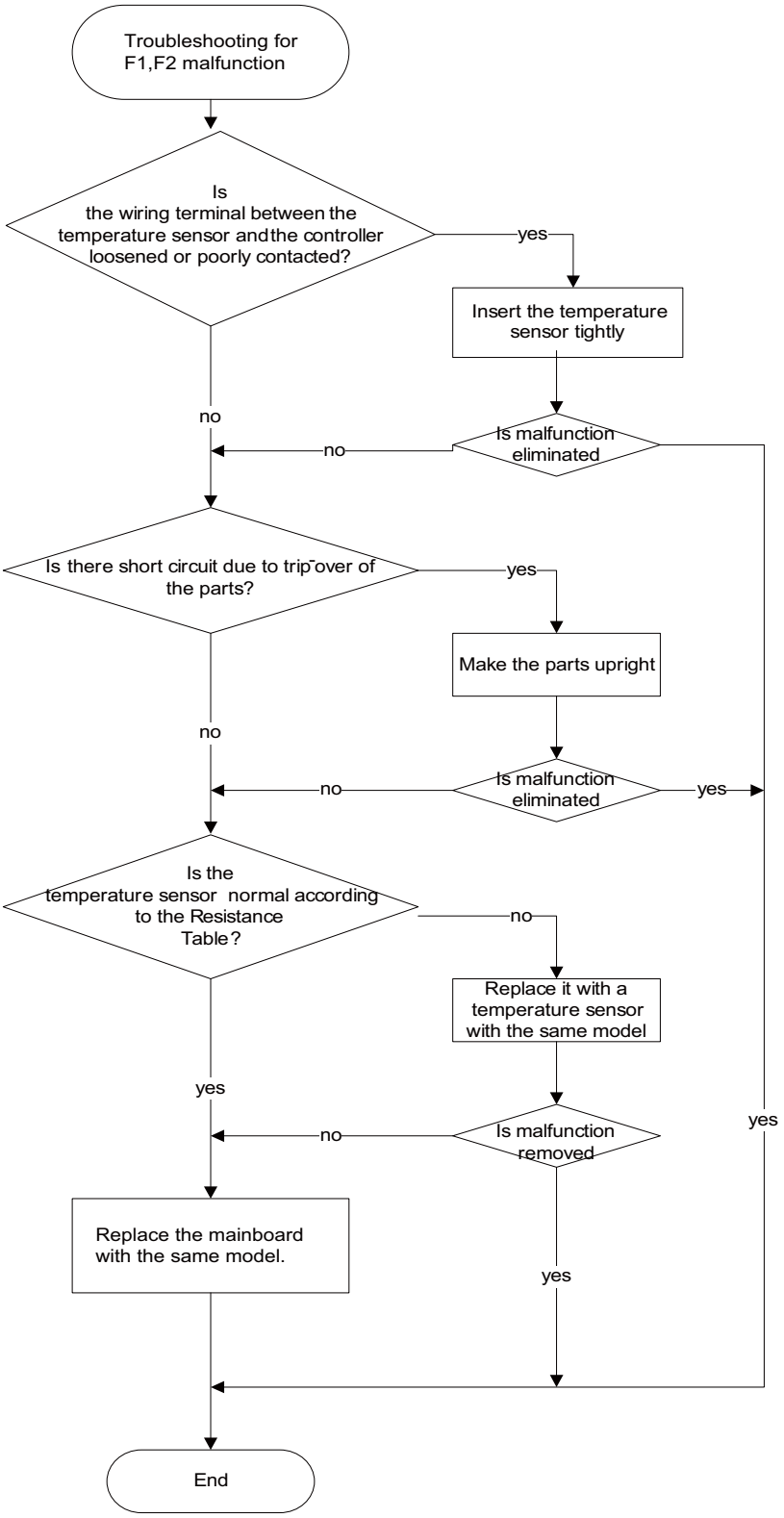

2. Malfunction of Blocked Protection of IDU Fan Motor H6

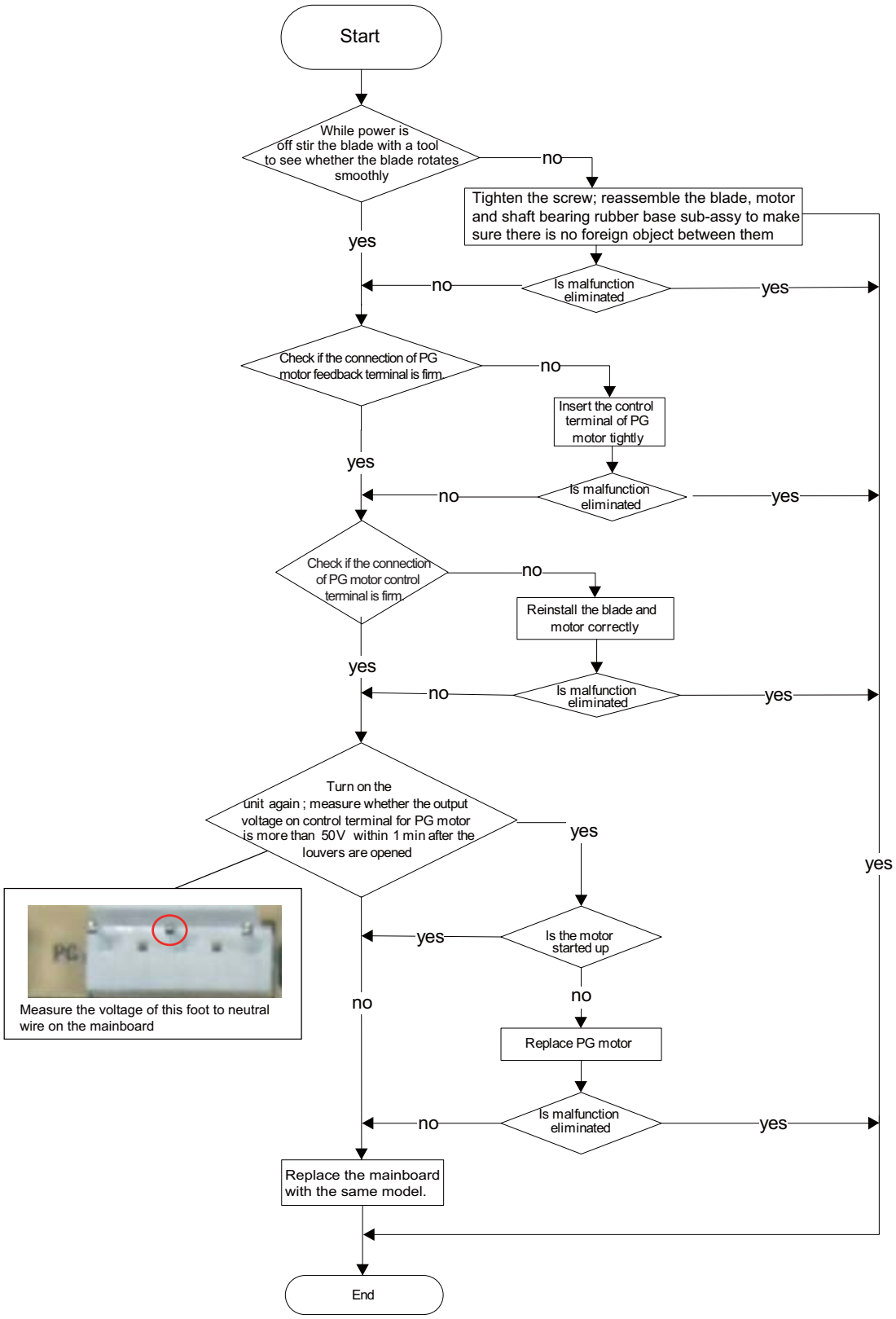

3. Malfunction of Protection of Jumper Cap C5

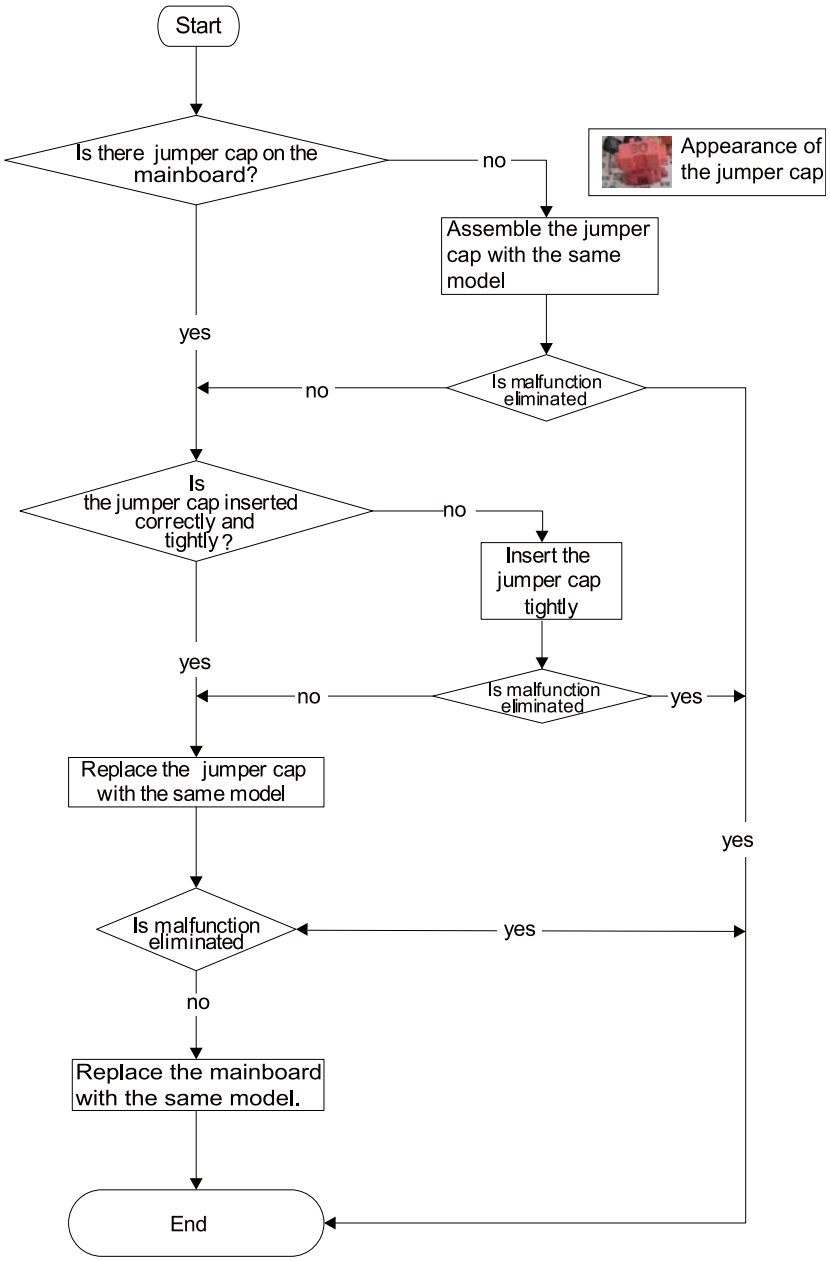

4. Communication malfunction E6

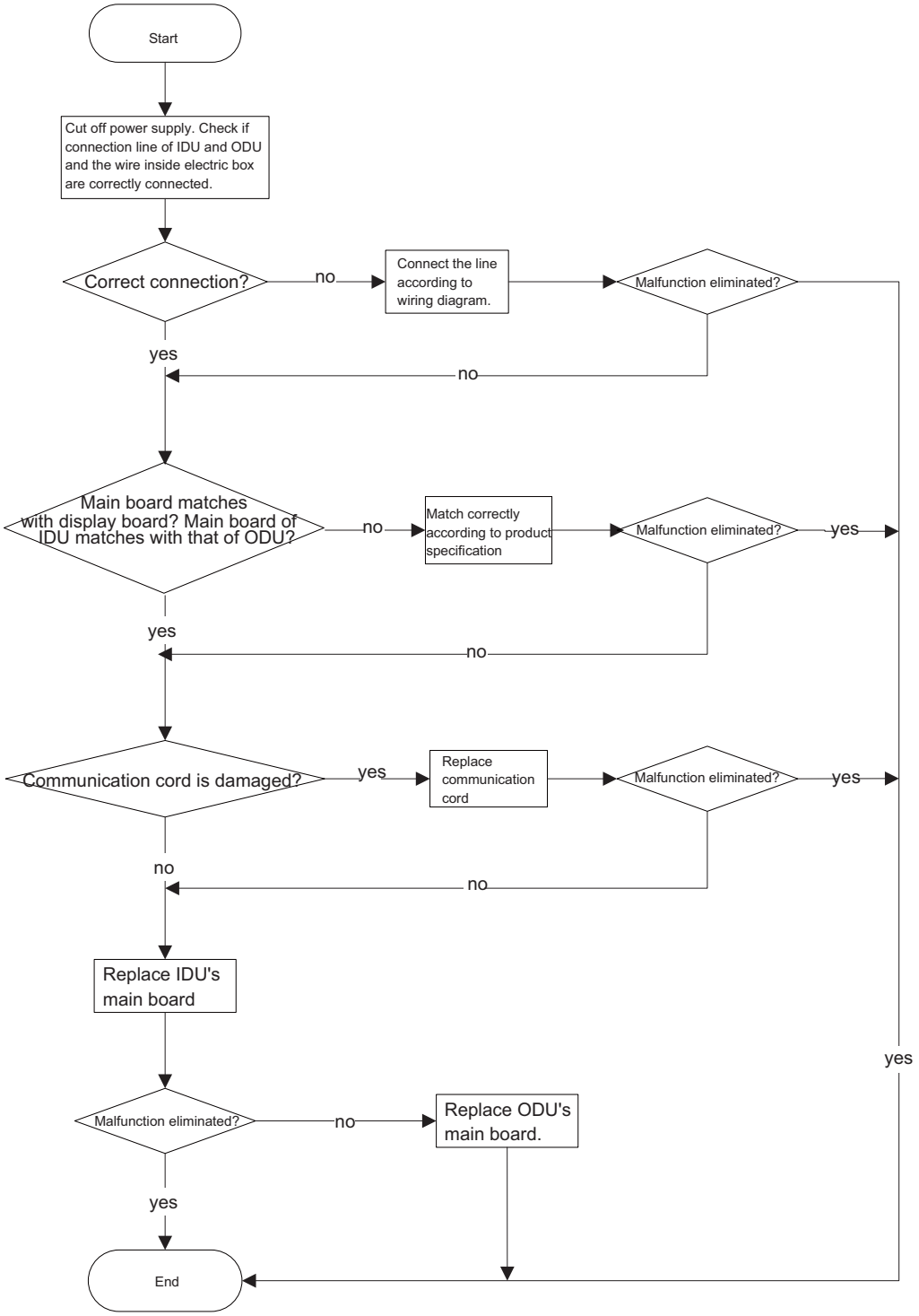

●**Outdoor unit:**

(1) Capacitor charge fault (Fault with outdoor unit) (AP1 below refers to the outdoor control panel)

Main Check Points:

●Use AC voltmeter to check if the voltage between terminal L and N on the wiring board is within 210VAC~240VAC.

●Is the reactor (L) correctly connected? Is the connection loose or fallen? Is the reactor (L) damaged?

Fault diagnosis process:

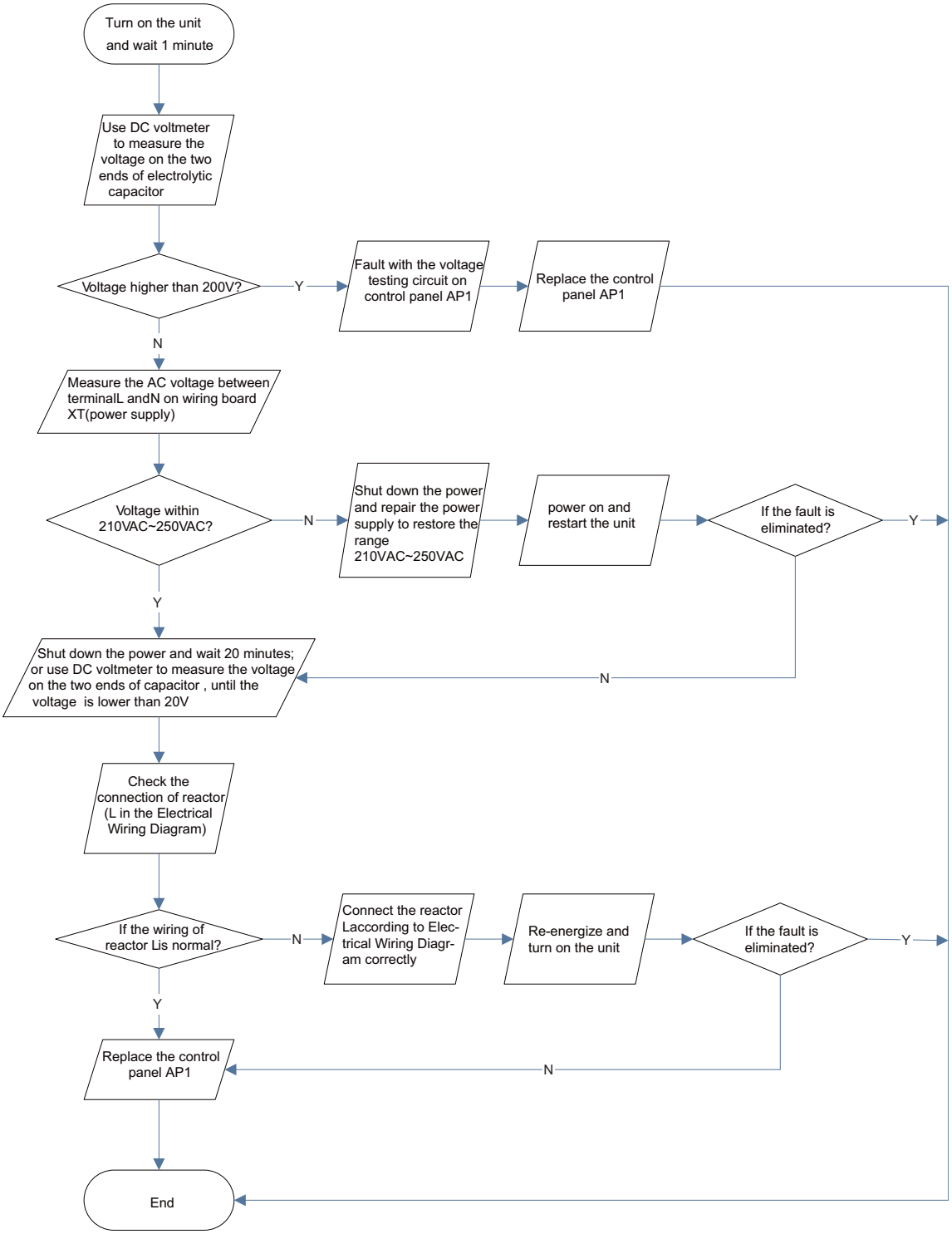

(2) IPM Protection, Out-of-step Fault, Compressor Phase Overcurrent (AP1 below refers to the outdoor control panel)

Main check points:

●Is the connection between control panel AP1 and compressor COMP secure? Loose? Is the connection in correct order?

●Is the voltage input of the machine within normal range? (Use AC voltmeter to measure the voltage between terminal L and N on the wiring board XT)

●Is the compressor coil resistance normal? Is the insulation of compressor coil against the copper tube in good condition?

●Is the working load of the machine too high? Is the radiation good?

●Is the charge volume of refrigerant correct?

Fault diagnosis process:

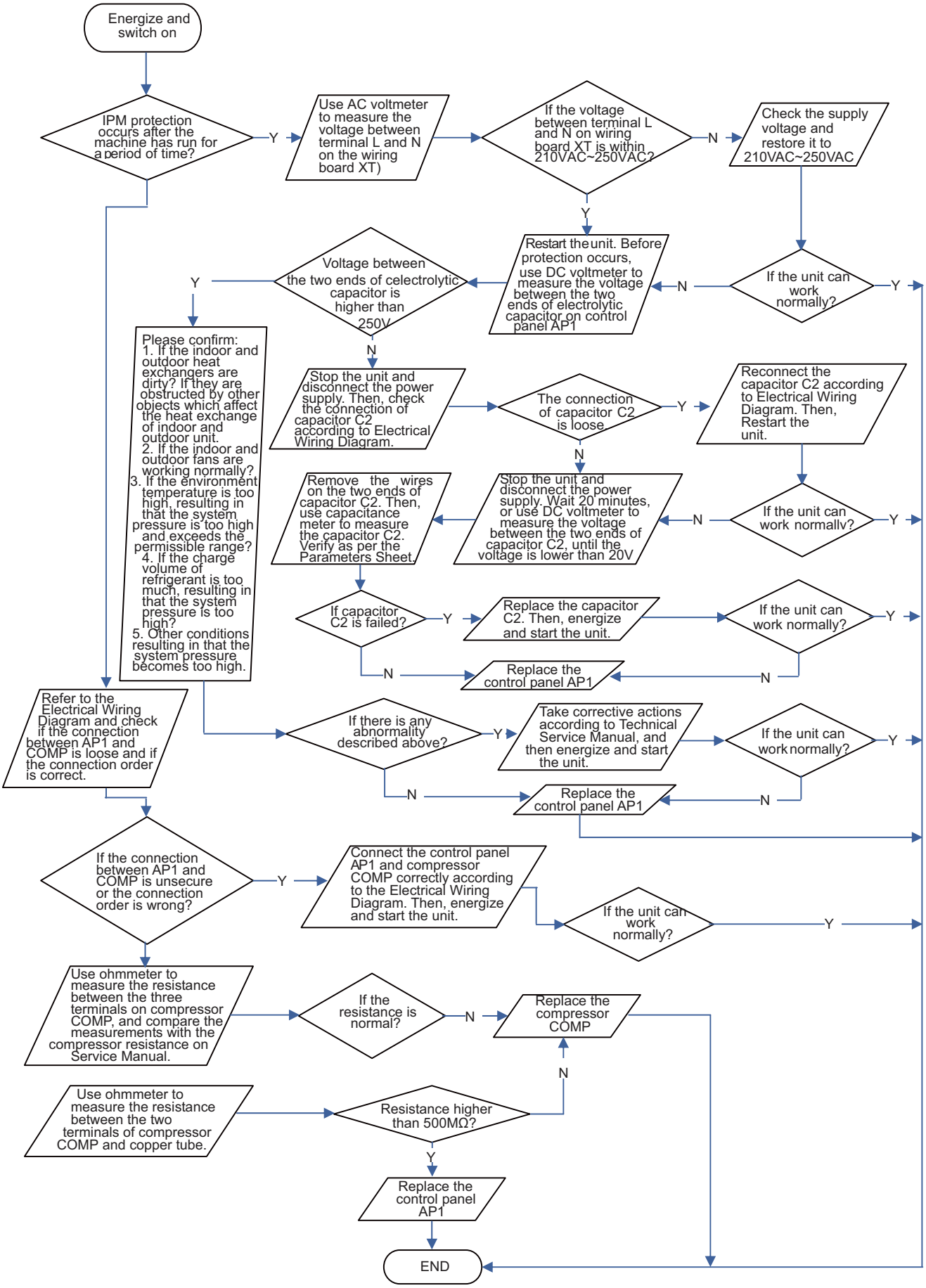
Energize and switch on
IPM protection occurs after the machine has run for a period of time?
Y
Use AC voltmeter to measure the voltage between terminal L and N on the wiring board XT)
If the voltage between terminal L and N on wiring board XT is within 210VAC~250VAC?
N
Check the supply voltage and restore it to 210VAC~250VAC
Y
Restart the unit. Before protection occurs, use DC voltmeter to measure the voltage between the two ends of electrolytic capacitor on control panel AP1
N
If the unit can work normally?
Y
Voltage between the two ends of celectrolytic capacitor is higher than 250V
Y
N
Please confirm:
1. If the indoor and outdoor heat exchangers are dirty? If they are obstructed by other objects which affect the heat exchange of indoor and outdoor unit.
2. If the indoor and outdoor fans are working normally?
3. If the environment temperature is too high, resulting in that the system pressure is too high and exceeds the permissible range?
4. If the charge volume of refrigerant is too much, resulting in that the system pressure is too high?
5. Other conditions resulting in that the system pressure becomes too high.
Stop the unit and disconnect the power supply. Then, check the connection of capacitor C2 according to Electrical Wiring Diagram.
The connection of capacitor C2 is loose.
Y
Reconnect the capacitor C2 according to Electrical Wiring Diagram. Then, Restart the unit.
N
Remove the wires on the two ends of capacitor C2. Then, use capacitance meter to measure the capacitor C2. Verify as per the Parameters Sheet.
Stop the unit and disconnect the power supply. Wait 20 minutes, or use DC voltmeter to measure the voltage between the two ends of capacitor C2, until the voltage is lower than 20V
N
If the unit can work normallv?
Y
If capacitor C2 is failed?
Y
Replace the capacitor C2. Then, energize and start the unit.
If the unit can work normally?
Y
N
Replace the control panel AP1
N
Refer to the Electrical Wiring Diagram and check if the connection between AP1 and COMP is loose and if the connection order is correct.
If there is any abnormality described above?
Y
Take corrective actions according to Technical Service Manual, and then energize and start the unit.
If the unit can work normally?
Y
N
Replace the control panel AP1
N
If the connection between AP1 and COMP is unsecure or the connection order is wrong?
Y
Connect the control panel AP1 and compressor COMP correctly according to the Electrical Wiring Diagram. Then, energize and start the unit.
If the unit can work normally?
Y
Use ohmmeter to measure the resistance between the three terminals on compressor COMP, and compare the measurements with the compressor resistance on Service Manual.
If the resistance is normal?
N
Replace the compressor COMP
N
Use ohmmeter to measure the resistance between the two terminals of compressor COMP and copper tube.
Resistance higher than 500MΩ?
Y
Replace the control panel AP1
END

(3) High temperature and overload protection diagnosis (AP1 hereinafter refers to the control board of the outdoor unit)

Mainly detect:

●Is outdoor ambient temperature in normal range?

●Are the outdoor and indoor fans operating normally?

●Is the heat dissipation environment inside and outside the unit good?

Fault diagnosis process:

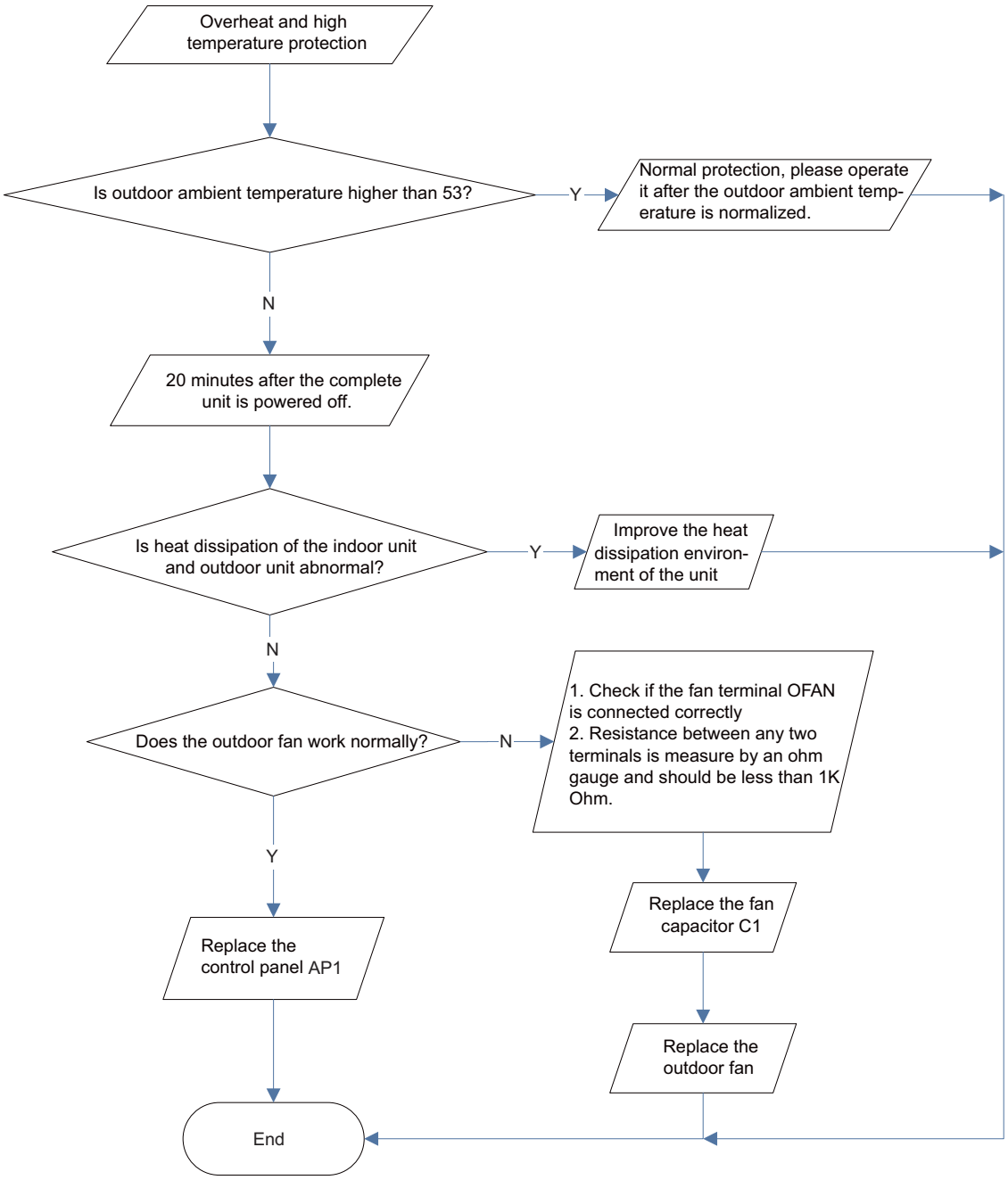

(4) Start-up failure (following AP1 for outdoor unit control board)

Mainly detect:

●Whether the compressor wiring is connected correct?

●Is compressor broken?

●Is time for compressor stopping enough?

Fault diagnosis process:

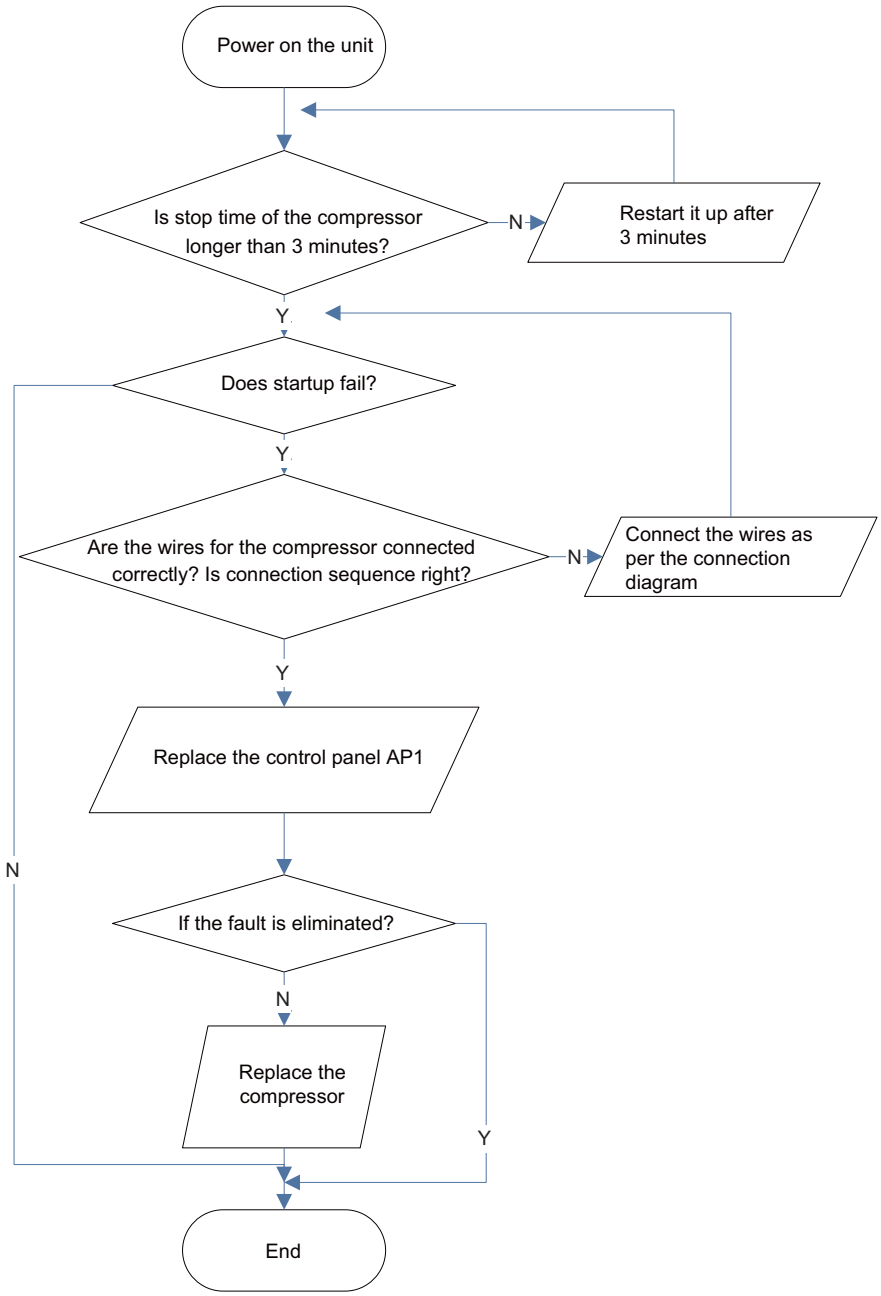

(5) Out of step diagnosis for the compressor (AP1 hereinafter refers to the control board of the outdoor unit)

Mainly detect:

●Is the system pressure too high?

●Is the input voltage too low?

Fault diagnosis process:

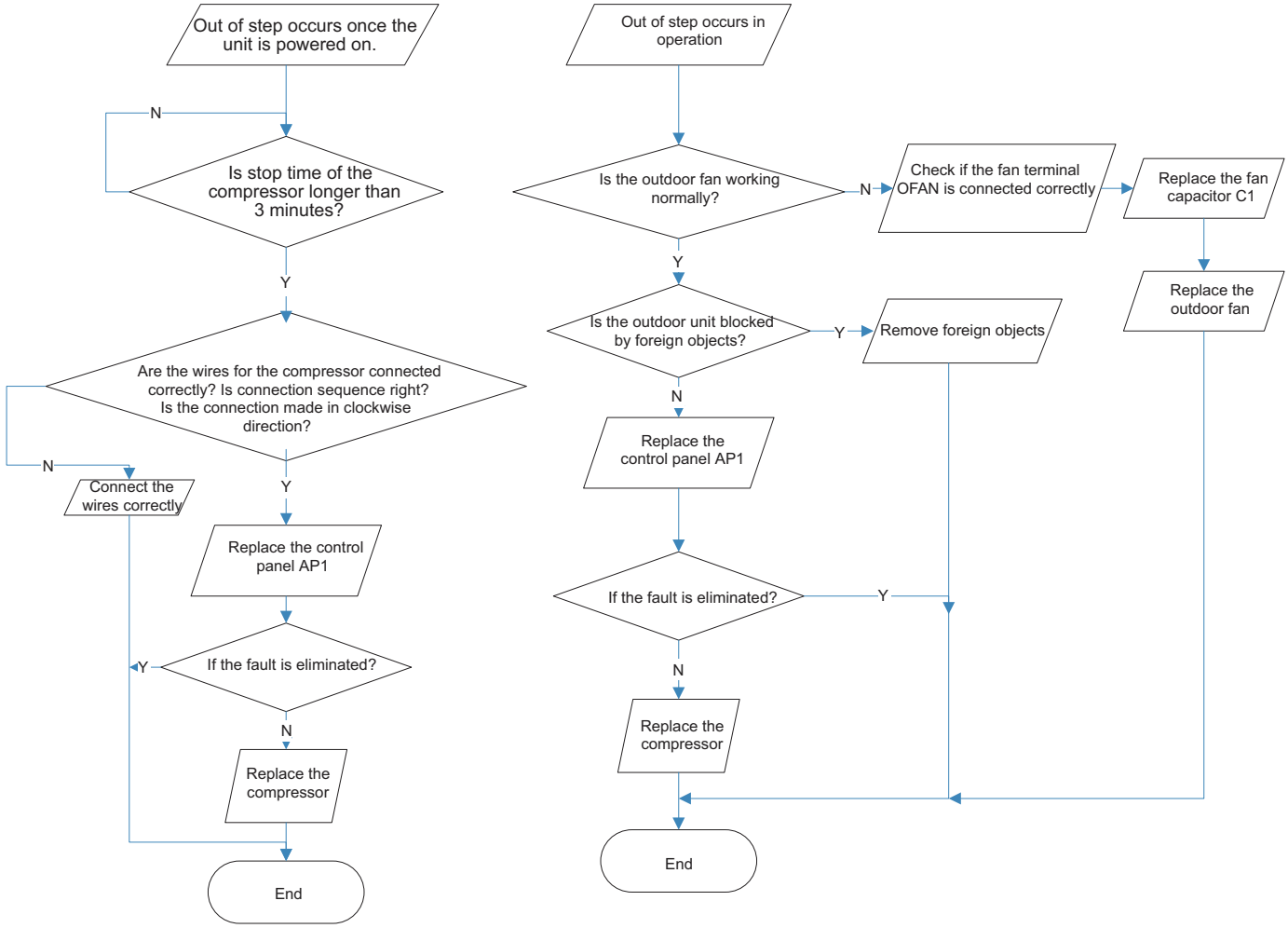

(6) Overload and air exhaust malfunction diagnosis (following AP1 for outdoor unit control board)

Mainly detect:

●Is the PMV connected well or not? Is PMV damaged?

●Is refrigerant leaked?

Fault diagnosis process:

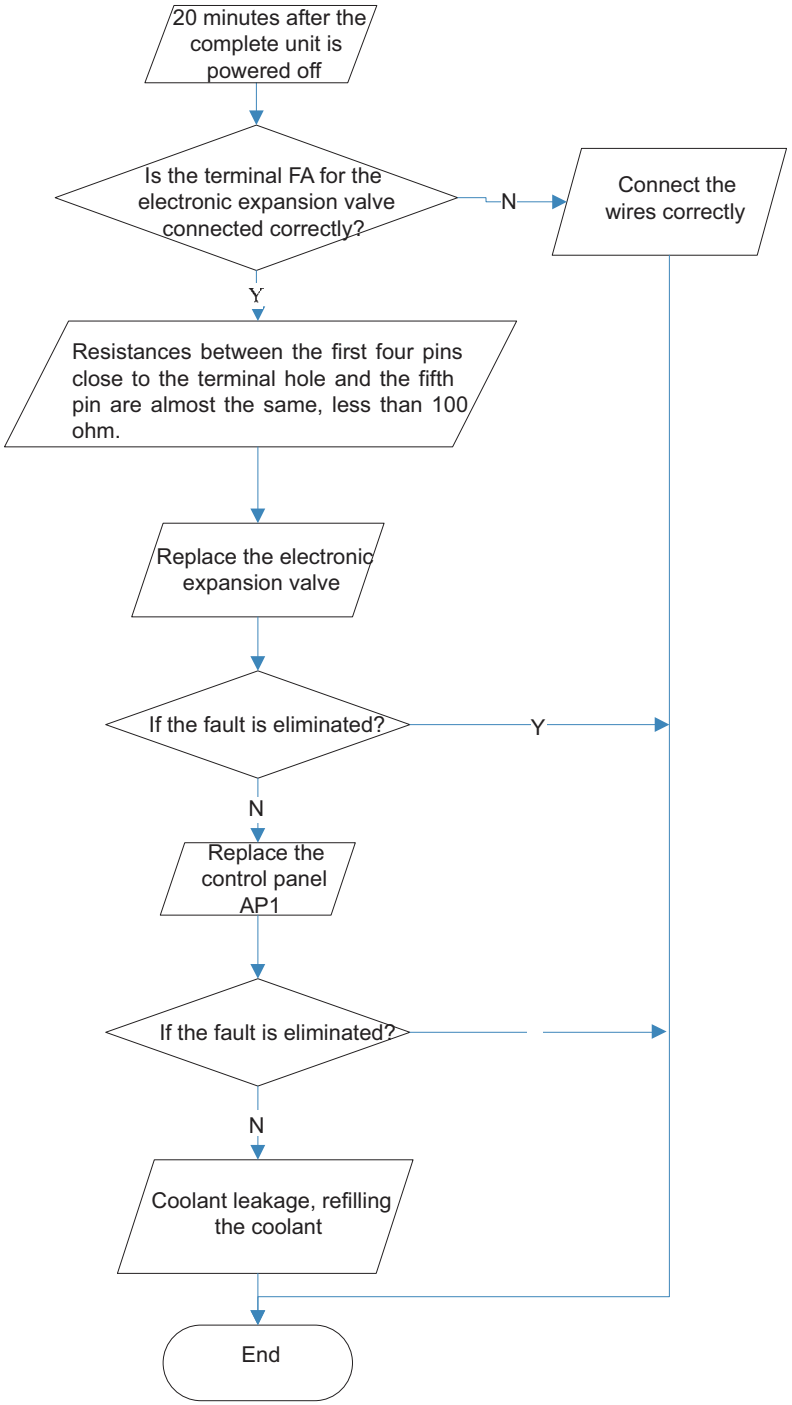

(7) Power factor correct or (PFC) fault (a fault of outdoor unit) (AP1 hereinafter refers to the control board of the outdoor unit)

Mainly detect:

●Check if the reactor (L) of the outdoor unit and the PFC capacitor are broken

Fault diagnosis process:

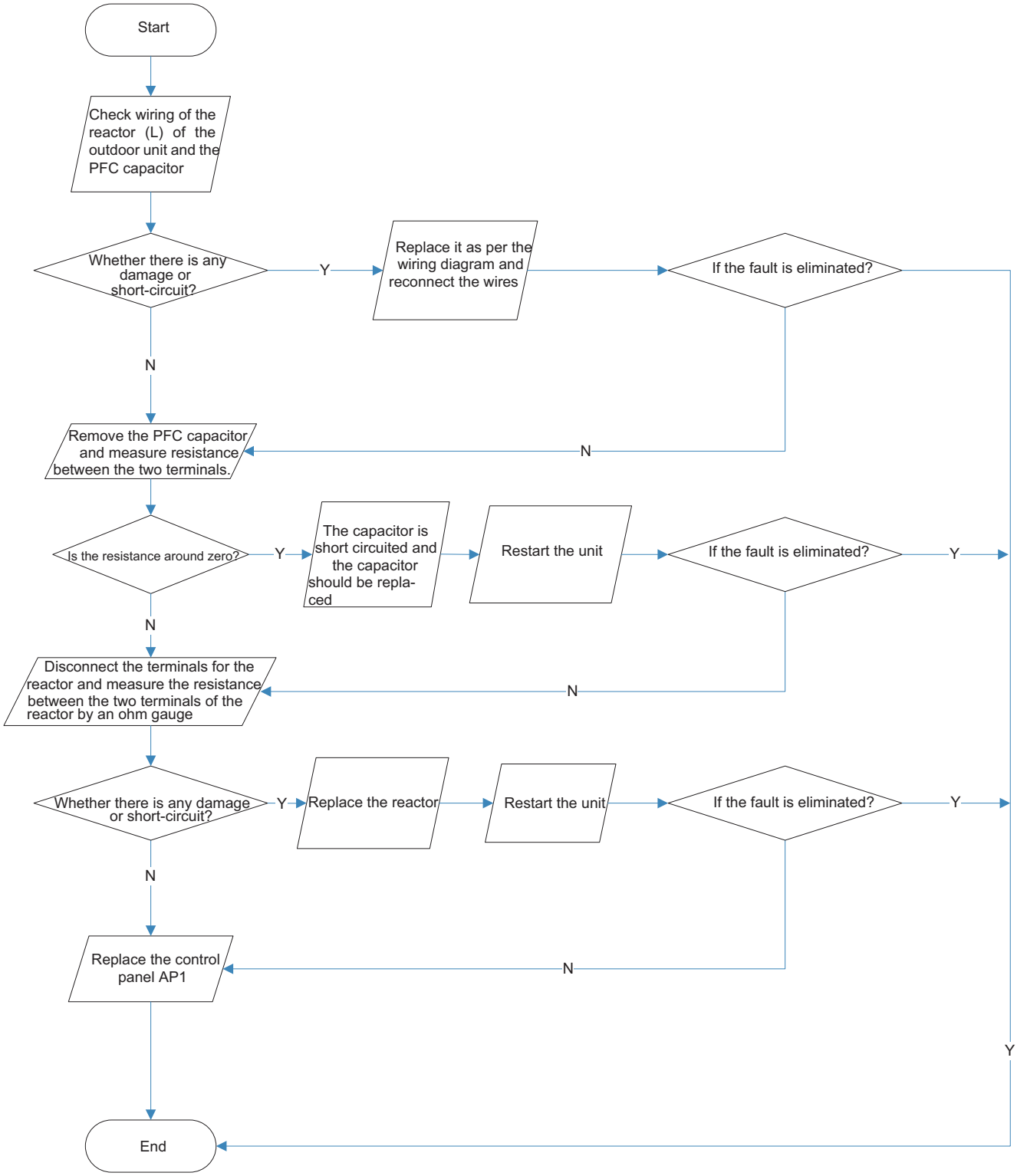

(8) Communication malfunction: (following AP1 for outdoor unit control board)

Mainly detect:

●Is there any damage for the indoor unit mainboard communication circuit? Is communication circuit damaged?

●Detect the indoor and outdoor units connection wire and indoor and outdoor units inside wiring is connect well or not, if is there any damage?

Fault diagnosis process:

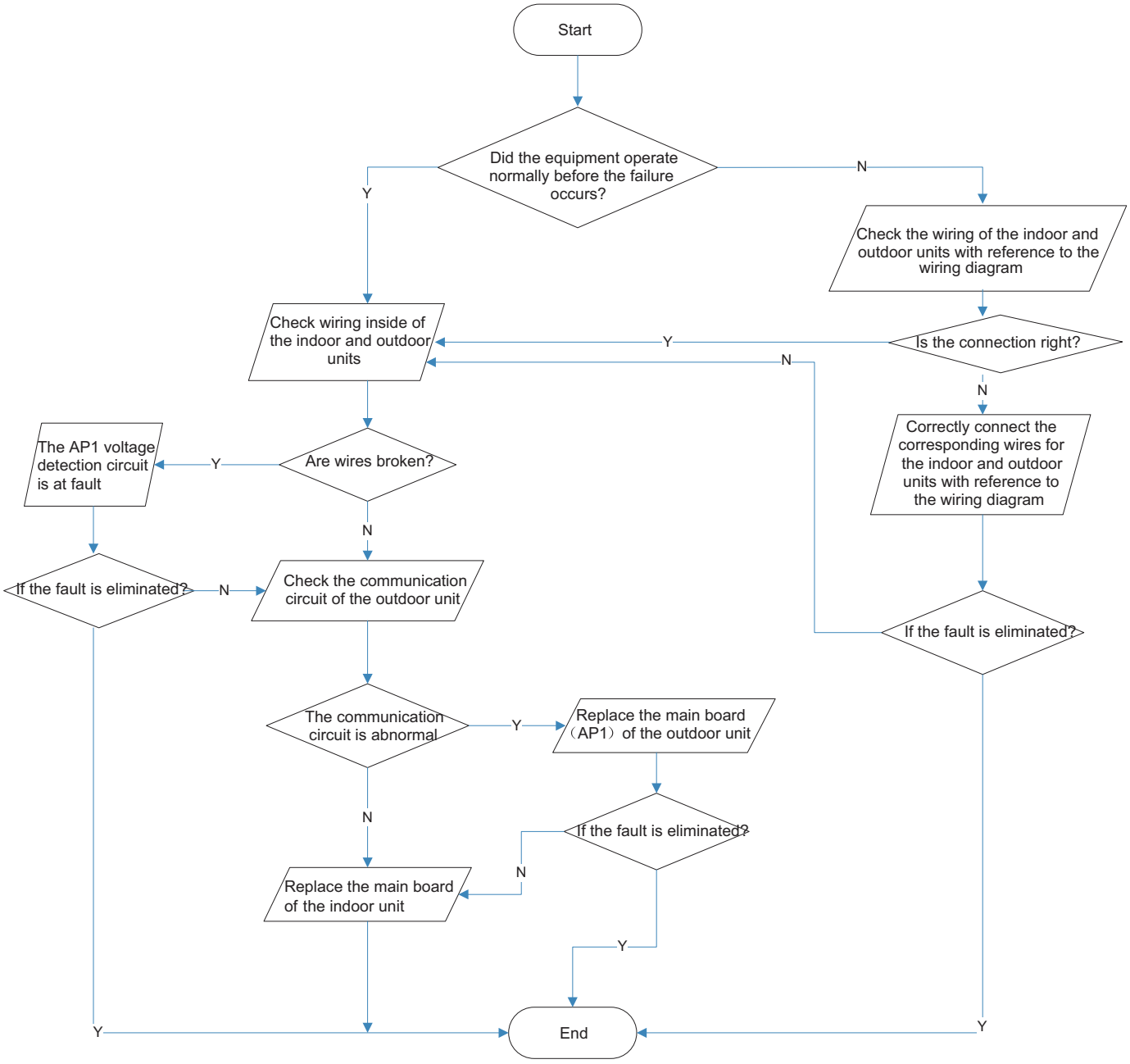

8.4 Troubleshooting for Normal Malfunction

1. Air Conditioning Unit Doesn't Start

Possible Causes	Discriminating Method (Air conditioner Status)	Troubleshooting
No power supply, or poor connection for power plug	After energization, operation indicator isn't bright and the buzzer can't give out sound	Confirm whether it's due to power failure. If yes, wait for power recovery. If not, check power supply circuit and make sure the power plug is connected well.
Wrong wire connection between indoor unit and outdoor unit, or poor connection for wiring terminals	Under normal power supply circumstances, operation indicator isn't bright after energization	Check the circuit according to circuit diagram and connect wires correctly. Make sure all wiring terminals are connected firmly
Electric leakage for air conditioner	After energization, room circuit breaker trips off at once	Make sure the air conditioner is grounded reliably Make sure wires of air conditioner is connected correctly Check the wiring inside air conditioner. Check whether the insulation layer of power cord is damaged; if yes, place the power cord.
Model selection for air switch is improper	After energization, air switch trips off	Select proper air switch
Malfunction of remote controller	After energization, operation indicator is bright, while no display on remote controller or buttons have no action.	Replace batteries for remote controller Repair or replace remote controller

2. Poor Cooling (Heating) for Air Conditioner

Possible Causes	Discriminating Method (Air conditioner Status)	Troubleshooting
Set temperature is improper	Observe the set temperature on remote controller	Adjust the set temperature
Rotation speed of the IDU fan motor is set too low	Small wind blow	Set the fan speed at high or medium
Filter of indoor unit is blocked	Check the filter to see it's blocked	Clean the filter
Installation position for indoor unit and outdoor unit is improper	Check whether the installation postion is proper according to installation requirement for air conditioner	Adjust the installation position, and install the rainproof and sunproof for outdoor unit
Refrigerant is leaking	Discharged air temperature during cooling is higher than normal discharged wind temperature; Discharged air temperature during heating is lower than normal discharged wind temperature; Unit's pressure is much lower than regulated range	Find out the leakage causes and deal with it. Add refrigerant.
Malfunction of 4-way valve	Blow cold wind during heating	Replace the 4-way valve
Malfunction of capillary	Discharged air temperature during cooling is higher than normal discharged wind temperature; Discharged air temperature during heating is lower than normal discharged wind temperature; Unit't pressure is much lower than regulated range. If refrigerant isn't leaking, part of capillary is blocked	Replace the capillary
Flow volume of valve is insufficient	The pressure of valves is much lower than that stated in the specification	Open the valve completely
Malfunction of horizontal louver	Horizontal louver can't swing	Refer to point 3 of maintenance method for details
Malfunction of the IDU fan motor	The IDU fan motor can't operate	Refer to troubleshooting for H6 for maintenance method in details
Malfunction of the ODU fan motor	The ODU fan motor can't operate	Refer to point 4 of maintenance method for details
Malfunction of compressor	Compressor can't operate	Refer to point 5 of maintenance method for details

3. Horizontal Louver Doesn't Swing

Possible Causes	Discriminating Method (Air conditioner Status)	Troubleshooting
Wrong wire connection, or poor connection	Check the wiring status according to circuit diagram	Connect wires according to wiring diagram to make sure all wiring terminals are connected firmly
Actuator is damaged	Actuator can't operate	Repair or replace actuator
Main board is damaged	Others are all normal, while horizontal louver can't operate	Replace the main board with the same model

4. ODU Fan Motor Doesn't Operate

Possible causes	Discriminating method (air conditioner status)	Troubleshooting
Wrong wire connection, or poor connection	Check the wiring status according to circuit diagram	Connect wires according to wiring diagram to make sure all wiring terminals are connected firmly
Capacity of the ODU fan motor is damaged	Measure the capacity of fan capacitor with an universal meter and find that the capacity is out of the deviation range indicated on the nameplate of fan capacitor.	Replace the capacity of fan
Power voltage is a little low or high	Use universal meter to measure the power supply voltage. The voltage is a little high or low	Suggest to equip with voltage regulator
Motor of outdoor unit is damaged	When unit is on, cooling/heating performance is bad and ODU compressor generates a lot of noise and heat.	Change compressor oil and refrigerant. If no better, replace the compressor with a new one

5. Compressor Doesn't Operate

Possible causes	Discriminating method (air conditioner status)	Troubleshooting
Wrong wire connection, or poor connection	Check the wiring status according to circuit diagram	Connect wires according to wiring diagram to make sure all wiring terminals are connected firmly
Capacity of compressor is damaged	Measure the capacity of fan capacitor with an universal meter and find that the capacity is out of the deviation range indicated on the nameplate of fan capacitor.	Replace the compressor capacitor
Power voltage is a little low or high	Use universal meter to measure the power supply voltage. The voltage is a little high or low	Suggest to equip with voltage regulator
Coil of compressor is burnt out	Use universal meter to measure the resistance between compressor terminals and it's 0	Repair or replace compressor
Cylinder of compressor is blocked	Compressor can't operate	Repair or replace compressor

6. Air Conditioning Unit is Leaking

Possible causes	Discriminating method (air conditioner status)	Troubleshooting
Drain pipe is blocked	Water leaking from indoor unit	Eliminate the foreign objects inside the drain pipe
Drain pipe is broken	Water leaking from drain pipe	Replace condensate pipe
Wrapping is not tight	Water leaking from the pipe connection place of indoor unit	Wrap it again and bundle it tightly

7. Abnormal Sound and Vibration

Possible causes	Discriminating method (air conditioner status)	Troubleshooting
When turn on or turn off the unit, the panel and other parts will expand and there's abnormal sound	There's the sound of "PAPA"	Normal phenomenon. Abnormal sound will disappear after a few minutes.
When turn on or turn off the unit, there's abnormal sound due to flow of refrigerant inside air conditioner	Water-running sound can be heard	Normal phenomenon. Abnormal sound will disappear after a few minutes.
Foreign objects inside the indoor unit or there're parts touching together inside the indoor unit	There's abnormal sound fro indoor unit	Remove foreign objects. Adjust all parts' position of indoor unit, tighten screws and stick damping plaster between connected parts
Foreign objects inside the outdoor unit or there're parts touching together inside the outdoor unit	There's abnormal sound fro outdoor unit	Remove foreign objects. Adjust all parts' position of outdoor unit, tighten screws and stick damping plaster between connected parts
Short circuit inside the magnetic coil	During heating, the way valve has abnormal electromagnetic sound	Replace magnetic coil
Abnormal shake of compressor	Outdoor unit gives out abnormal sound	Adjust the support foot mat of compressor, tighten the bolts
Abnormal sound inside the compressor	Abnormal sound inside the compressor	If add too much refrigerant during maintenance, please reduce refrigerant properly. Replace compressor for other circumstances.

9. Removal Procedures

⚠ **Warning: Be sure to wait for a minimum of 20 minutes after turning off all power supplies and discharge the refrigerant completely before removal.**

9.1 Removal Procedures of Indoor Unit

Take A1 panel for example

Step	Procedure	
1. Remove filter assembly		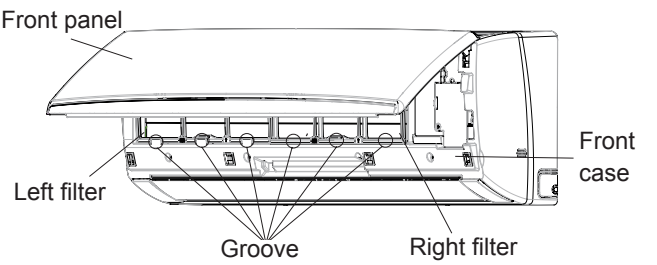
	Open the front panel. Push the left filter and right filter until they are separate from the groove on the front panel. Remove the left filter and right filter respectively.	
2. Remove horizontal louver		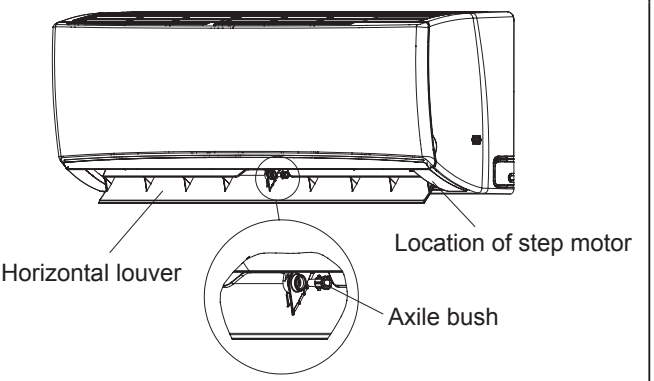
	Push out the axile bush on horizontal louver. Bend the horizontal louver with hand and then separate the horizontal louver from the crankshaft of step motor to remove it.	
3. Remove panel		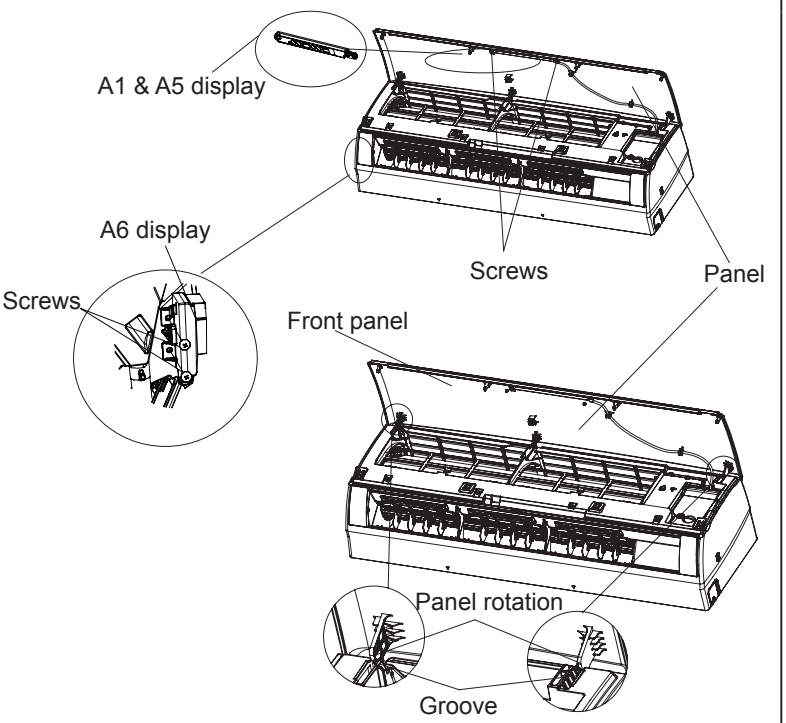
a	(1)A1& A5 display: Remove the 2 screws that are locking the display board. Separate the display board from the front panel. (2)A6 display: Remove the 2 screws that are locking the display board.	
b	Separate the panel rotation shaft from the groove fixing the front panel and then remove the front panel.	

Step	Procedure	
4. Remove electric box cover		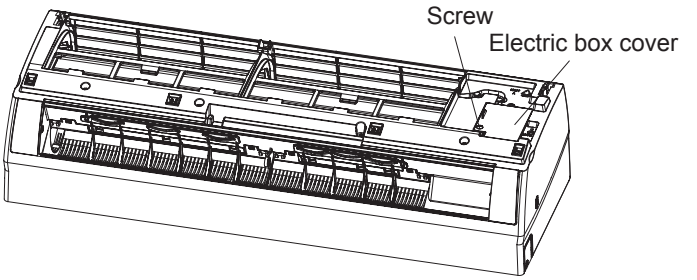
	Remove the screws on the electric box cover to remove the electric box cover.	
5. Remove front case sub-assy		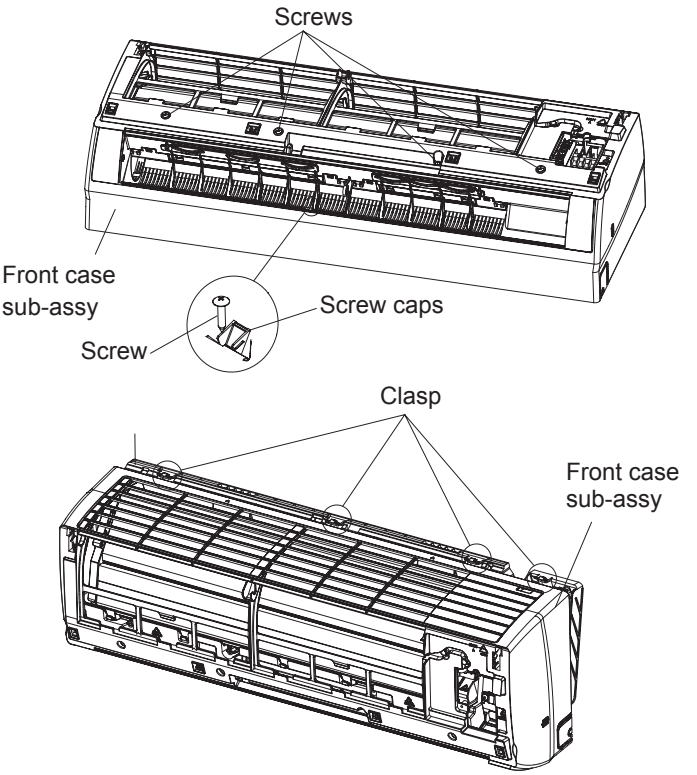
a	Remove the screws fixing front case. Note: 1.Open the screw caps before removing the screws around the air outlet. 2.The quantity of screws fixing the front case sub-assy is different for different models.	
b	Loosen the connection clasps between front case sub-assy and bottom case. Lift up the front case sub-assy and take it out.	
6. Remove vertical louver		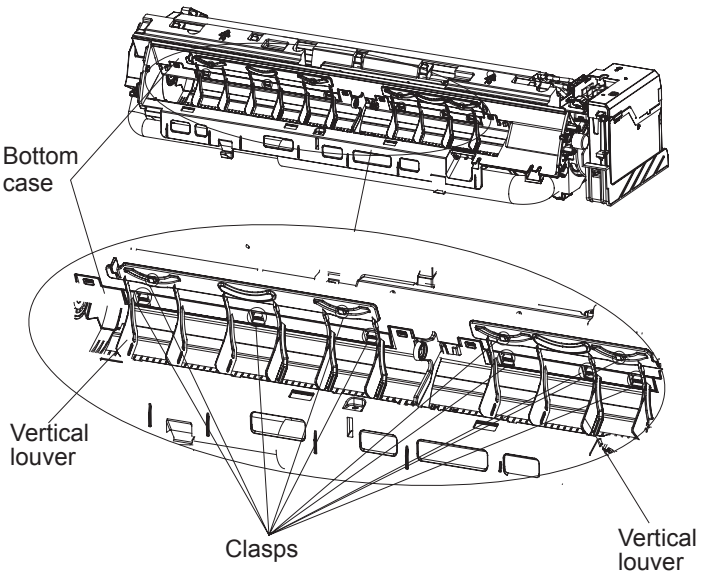
	Loosen the connection clasps between vertical louver and bottom case to remove vertical louver.	

Step	Procedure	
7. Remove electric box assy		
a	Loosen the connection clasps between shield cover of electric box sub-assy and electric box, and then remove the shield cover of electric box sub-assy. Remove the screw fixing electric box assy .	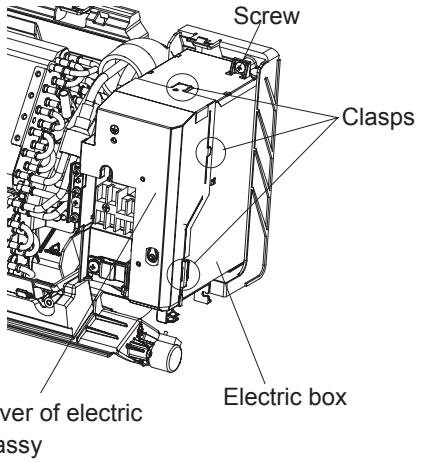
b	① Take off the water retaining sheet. Remove the cold plasma generator by screwing off the locking screw on the generator. ② Take off the indoor tube temperature sensor. ③ Remove 1 grounding screw. ④ Remove the wiring terminals of motor and stepping motor. ⑤ Remove the electric box assy.	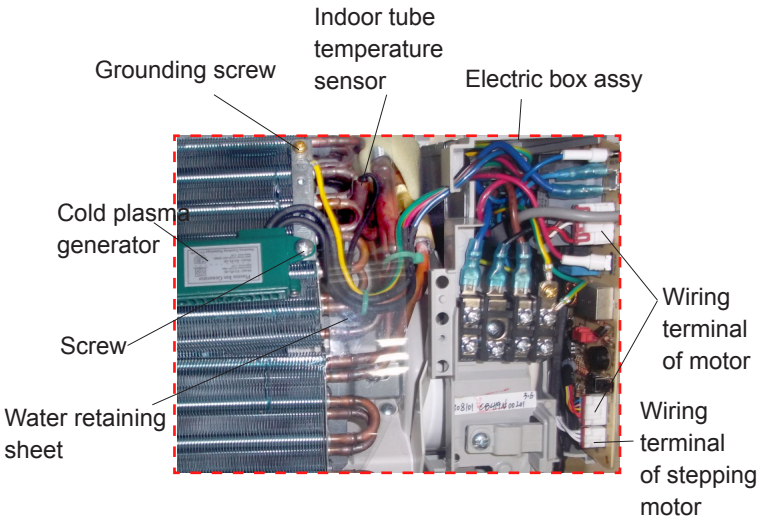
c	Twist off the screws that are locking each lead wire and rotate the electric box assy. Twist off the screws that are locking the wire clip. Loosen the power cord and remove its wiring terminal. Lift up the main board and take it off.	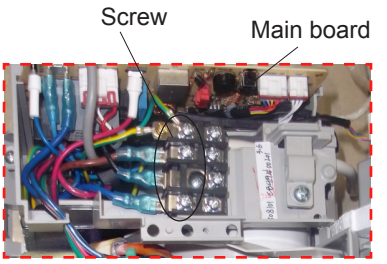 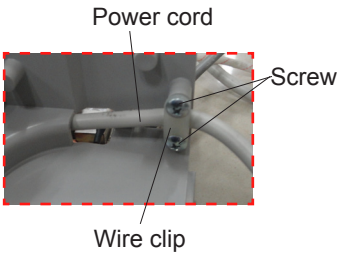

Step	Procedure	
	Some wiring terminals of this product have lock catch and other devices. The pulling method is as below: 1.Remove the soft sheath for some terminals first, hold the circlip and then pull out the terminals. 2.Pull out the holder for some terminals at first (holder is not available for some wiring terminals), hold the connector and then pull the terminal.	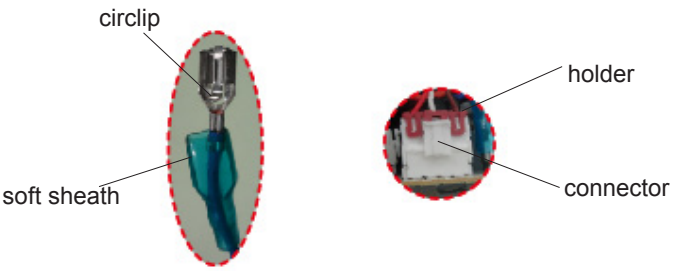
8. Remove evaporator assy		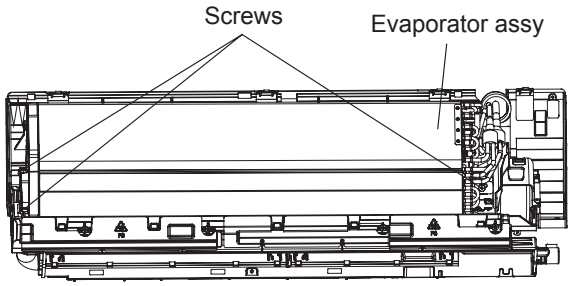
a	Remove 3 screws fixing evaporator assy.	
b	At the back of the unit, remove the screw fixing connection pipe clamp and then remove the connection pipe clamp.	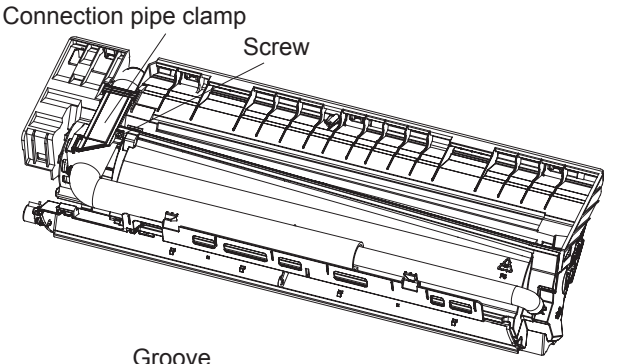
c	First remove the left side of the evaporator from the groove of bottom case and then remove the right side from the clasp on the bottom case.	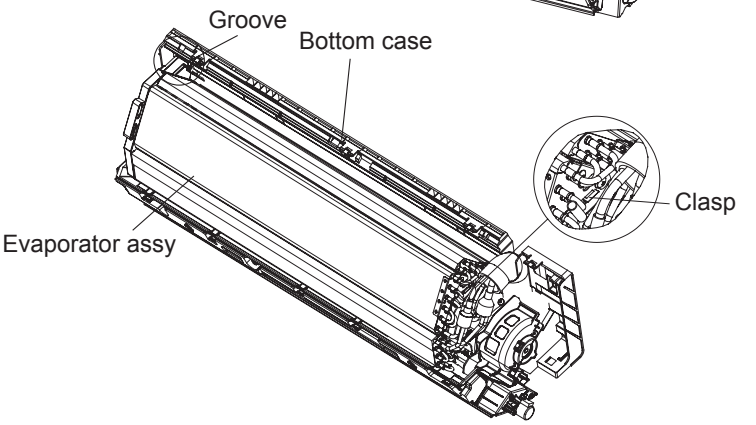
d	Adjust the position of connection pipe on evaporator slightly and then lift the evaporator upwards to remove it.	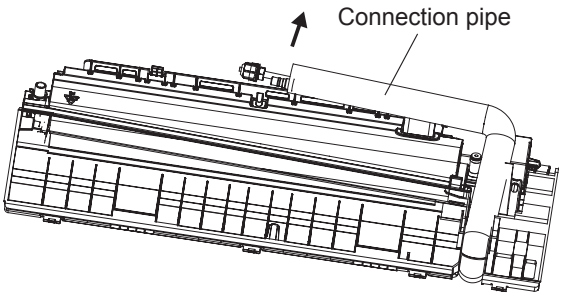

Step	Procedure
9. Remove motor and cross flow blade	
a	Remove the screws fixing motor clamp and then remove the motor clamp.
b	Remove the screws at the connection place of cross flow blade and motor; lift the motor and cross flow blade upwards to remove them. Remove the bearing holder sub-assy. Remove the screw fixing step motor and then remove the step motor.

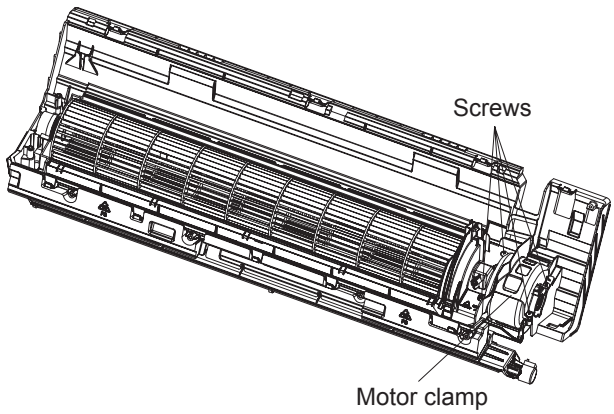

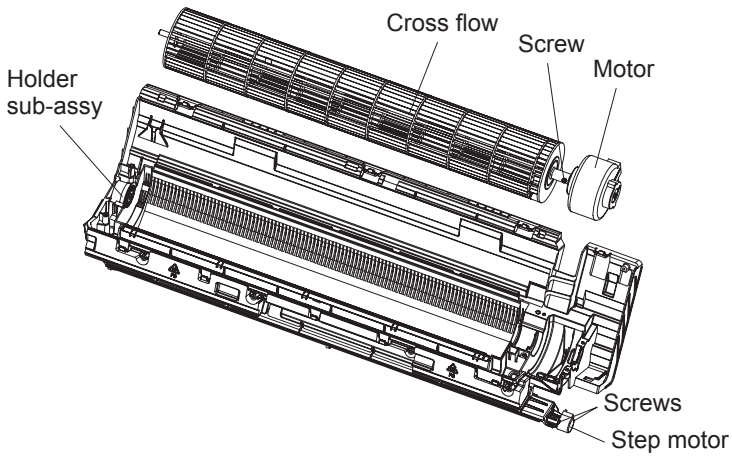

9.2 Removal Procedures of Outdoor Unit

⚠ **Warning: Be sure to wait for a minimum of 20 minutes after turning off all power supplies and discharge the refrigerant completely before removal.**

Steps	Procedure	
1.Remove panel		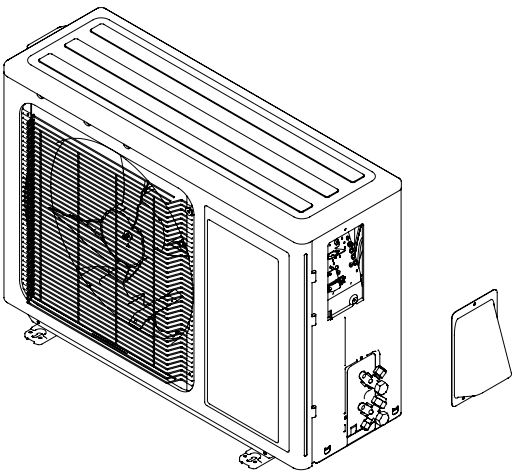
	Open the front panel Push the rotor shaft on both sides of the panel to make it separate from the groove. Remove the panel.	
2.Remove top cover		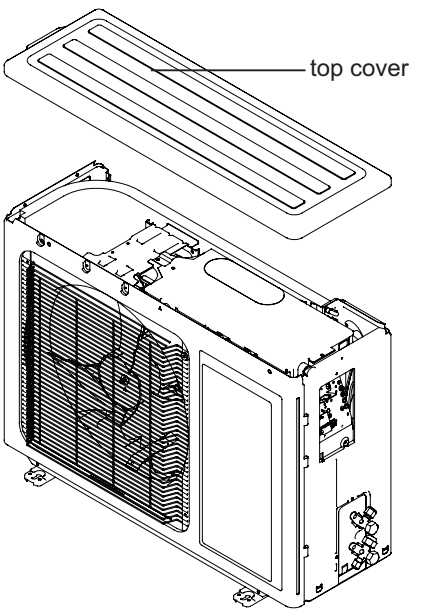
	Remove connection screws connecting the top cover plate with the front panel and the right side plate, and then remove the top cover.	
3.Remove front grille		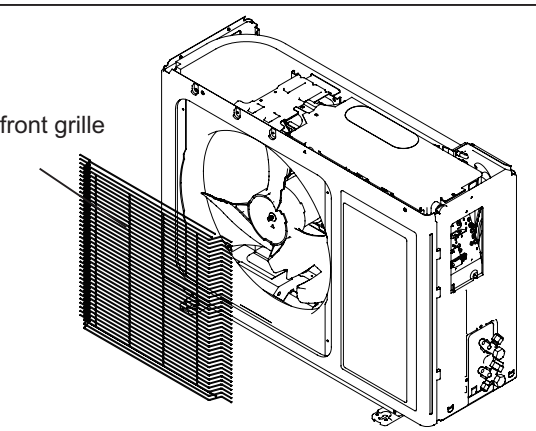
	Remove connection screws between the front grille and the front panel. Then remove the front grille.	

Steps	Procedure
4.Remove front panel	
Remove connection screws connecting the front panel with the chassis and the motor support, and then remove the front panel.	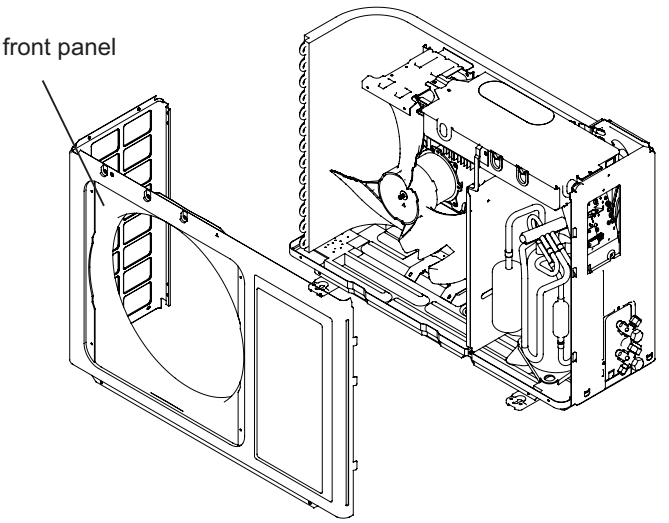
5.Remove right side plate	
Remove connection screws connecting the right side plate with the valve support and the electric box. Then remove the right side plate.	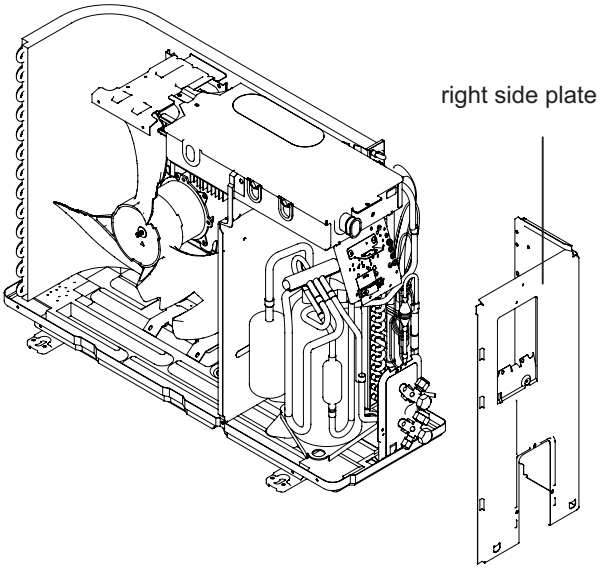
6.Remove axial flow blade	
Remove the nut securing the blade and then remove the axial flow blade.	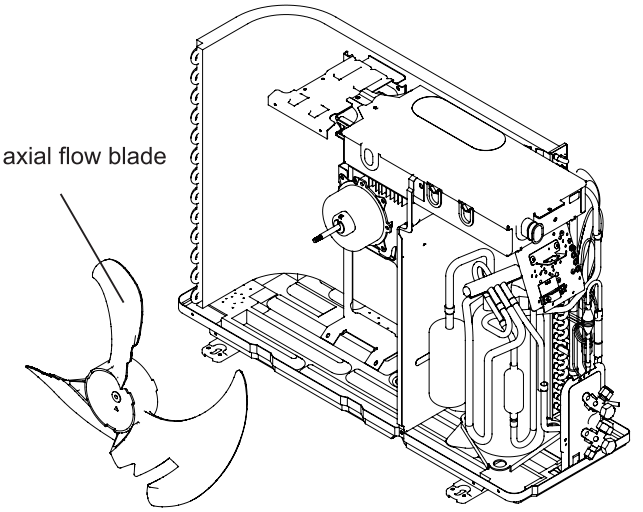

Steps	Procedure
7.Remove motor and motor support	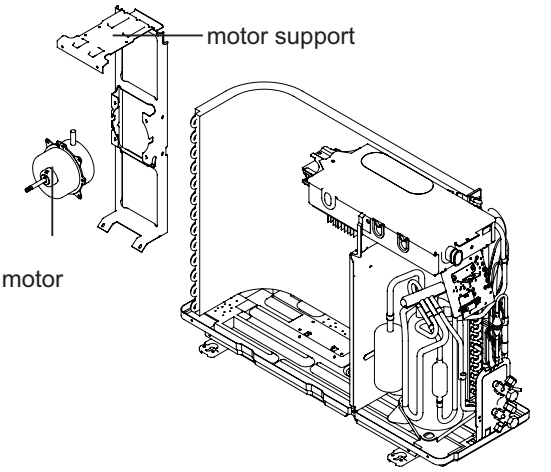
Remove the 4 tapping screws fixing the motor. Pull out the lead-out wire and remove the motor. Remove the 2 tapping screws fixingthe motor support. Lift motor support to remove it.	
8.Remove electric box assy	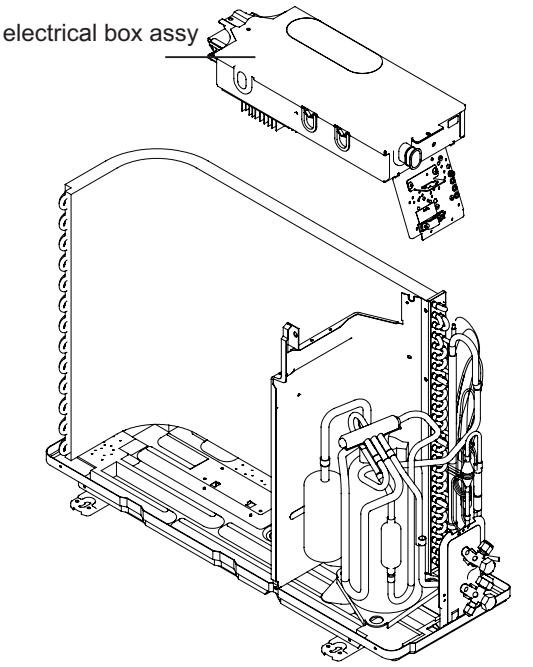
Remove the 2 screws fixing the cover of electrical box. Lift to remove the cover. Loosen the wire and disconnect the terminal. Lift to remove the electric box assy.	
9.Remove clapboard sub-assy	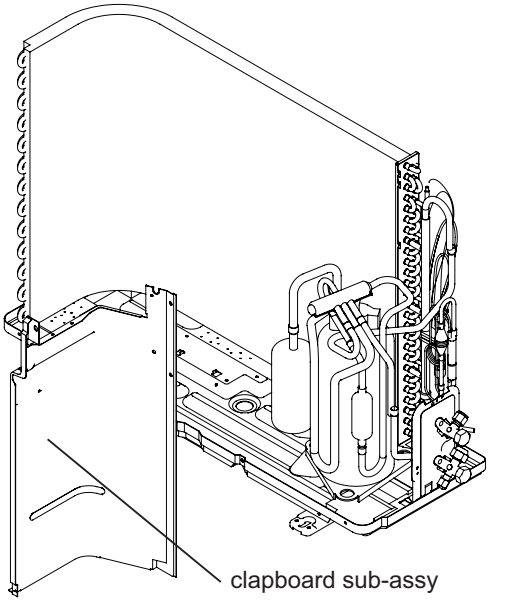
Loosen the screws of the clapboard sub-assy .The clapboard sub-assy has a hook on thelower side. Lift and pull the clapboard sub-assy to remove.	

Steps	Procedure	
10.Remove 4-way valve assy		
	Unscrew the fastening nut of the 4-way Valve Assy coil and remove the coil. Wrap the 4-way Valve Assy with wet cotton and unsolder the 4 weld spots connecting the 4-way Valve Assy to take it out **(Note: Refrigerant should be discharged first.)** Welding process should be done as quickly as possible and keep wrapping cotton wet all the time. Be sure not to burn out the lead-out wire of compressor.	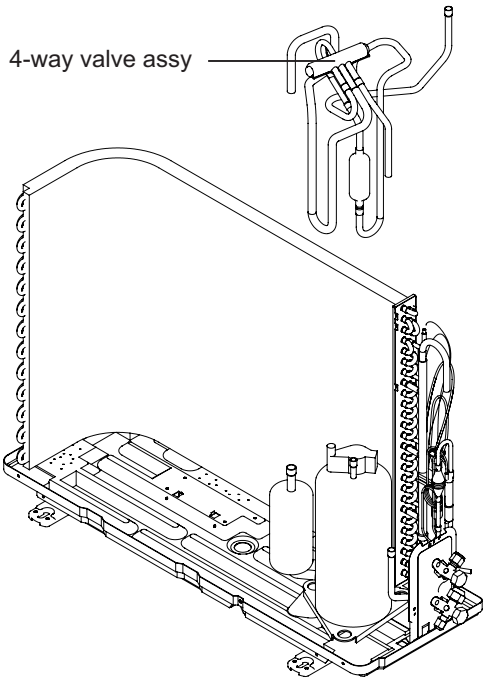
11.Remove compressor		
	Remove the 3 footing screws of the compressor and remove the compressor.	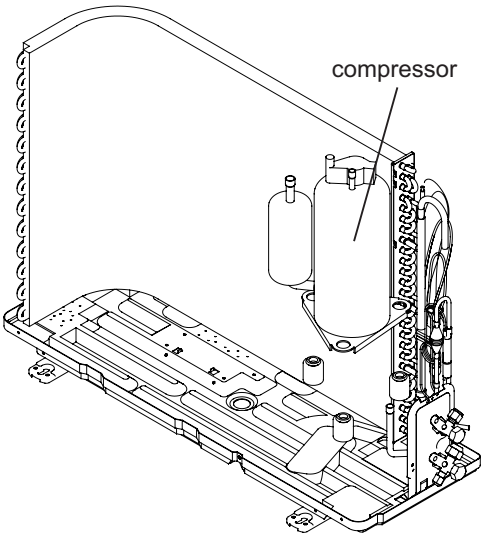

Appendix:

Appendix 1: Reference Sheet of Celsius and Fahrenheit

Conversion formula for Fahrenheit degree and Celsius degree: Tf=Tcx1.8+32

Set temperature

Fahrenheit display temperature (℉)	Fahrenheit (℉)	Celsius (℃)		Fahrenheit display temperature (℉)	Fahrenheit (℉)	Celsius (℃)		Fahrenheit display temperature (℉)	Fahrenheit (℉)	Celsius (℃)
61	60.8	16		69/70	69.8	21		78/79	78.8	26
62/63	62.6	17		71/72	71.6	22		80/81	80.6	27
64/65	64.4	18		73/74	73.4	23		82/83	82.4	28
66/67	66.2	19		75/76	75.2	24		84/85	84.2	29
68	68	20		77	77	25		86	86	30

Ambient temperature

Fahrenheit display temperature (℉)	Fahrenheit (℉)	Celsius (℃)		Fahrenheit display temperature (℉)	Fahrenheit (℉)	Celsius (℃)		Fahrenheit display temperature (℉)	Fahrenheit (℉)	Celsius (℃)
32/33	32	0		55/56	55.4	13		79/80	78.8	26
34/35	33.8	1		57/58	57.2	14		81	80.6	27
36	35.6	2		59/60	59	15		82/83	82.4	28
37/38	37.4	3		61/62	60.8	16		84/85	84.2	29
39/40	39.2	4		63	62.6	17		86/87	86	30
41/42	41	5		64/65	64.4	18		88/89	87.8	31
43/44	42.8	6		66/67	66.2	19		90	89.6	32
45	44.6	7		68/69	68	20		91/92	91.4	33
46/47	46.4	8		70/71	69.8	21		93/94	93.2	34
48/49	48.2	9		72	71.6	22		95/96	95	35
50/51	50	10		73/74	73.4	23		97/98	96.8	36
52/53	51.8	11		75/76	75.2	24		99	98.6	37
54	53.6	12		77/78	77	25				

Appendix 2: Configuration of Connection Pipe

1.Standard length of connection pipe

● 16.40ft, 24.61ft, 26.25ft.

2.Min. length of connection pipe is 9.84ft.

3.Max. length of connection pipe and max. high difference.

4.The additional refrigerant oil and refrigerant charging required after prolonging connection pipe

● After the length of connection pipe is prolonged for 32.81ft at the basis of standard length, you should add 0.0013gal of refrigerant oil for each additional 16.40ft of connection pipe.

● The calculation method of additional refrigerant charging amount (on the basis of liquid pipe):

Cooling capacity	Max length of connection pipe	Max height difference
5000 Btu/h(1465 W)	49.21ft	16.40ft
7000 Btu/h(2051 W)	49.21ft	16.40ft
9000 Btu/h(2637 W)	49.21ft	32.81ft
12000 Btu/h(3516 W)	65.62ft	32.81ft
18000 Btu/h(5274 W)	82.02ft	32.81ft
24000 Btu/h(7032 W)	82.02ft	32.81ft
28000 Btu/h(8204 W)	98.43ft	32.81ft
36000 Btu/h(10548 W)	98.43ft	65.62ft
42000 Btu/h(12306 W)	98.43ft	65.62ft
48000 Btu/h(14064 W)	98.43ft	65.62ft

● When the length of connection pipe is above 16.40ft, add refrigerant according to the prolonged length of liquid pipe. The additional refrigerant charging amount per meter is different according to the diameter of liquid pipe. See the following sheet.

● Additional refrigerant charging amount = prolonged length of liquid pipe X additional refrigerant charging amount per meter

Additional refrigerant charging amount for R22, R407C, R410A and R134a			
Diameter of connection pipe		Outdoor unit throttle	
Liquid pipe(inch)	Gas pipe(inch)	Cooling only(oz/ft.)	Cooling and heating(oz/ft.)
Φ0.24	Φ0.37 or Φ0.47	0.2	0.2
Φ0.24 or Φ0.37	Φ0.63 or Φ0.75	0.2	0.2
Φ0.47	Φ0.75 or Φ0.87	0.3	1.3
Φ0.63	Φ1 or Φ1.25	0.7	1.3
Φ0.75	/	2.7	2.7
Φ0.87	/	3.8	3.8

Appendix 3: Pipe Flaring Method

⚠ **Note:**

Improper pipe flaring is the main cause of refrigerant leakage. Please flare the pipe according to the following steps:

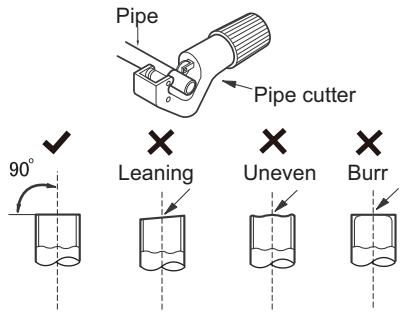

A:Cut the pipe

● Confirm the pipe length according to the distance of indoor unit and outdoor unit.

● Cut the required pipe with pipe cutter.

B:Remove the burrs

● Remove the burrs with shaper and prevent the burrs from getting into the pipe.

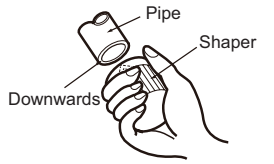

C:Put on suitable insulating pipe

D:Put on the union nut

● Remove the union nut on the indoor connection pipe and outdoor valve; install the union nut on the pipe.

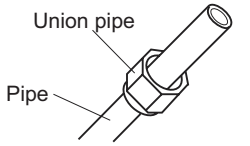

E:Flare the pipe

● Flare the pipe with expander.

⚠ **Note:**

● "A" is different according to the diameter, please refer to the sheet below:

Outer diameter(inch)	A(inch)	
	Max	Min
Φ0.24 - 0.25 (1/4")	0.05	0.03
Φ0.37 (3/8")	0.06	0.04
Φ0.47 - 0.50 (1/2")	0.07	0.04
Φ0.63 - 0.625 (5/8")	0.09	0.09

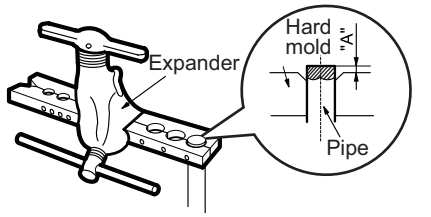

F:Inspection

● Check the quality of flaring port. If there is any blemish, expand the pipe again according to the steps above.

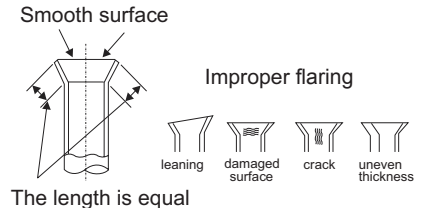

Appendix 4: List of Resistance for Temperature Sensor

Resistance Table of Ambient Temperature Sensor for Indoor and Outdoor(15K)

Temp.(°F)	Resistance(kΩ)		Temp.(°F)	Resistance(kΩ)		Temp.(°F)	Resistance(kΩ)		Temp.(°F)	Resistance(kΩ)
-2.2	138.1		68	18.75		138.2	3.848		208.4	1.071
-0.4	128.6		69.8	17.93		140	3.711		210.2	1.039
1.4	121.6		71.6	17.14		141.8	3.579		212	1.009
3.2	115		73.4	16.39		143.6	3.454		213.8	0.98
5	108.7		75.2	15.68		145.4	3.333		215.6	0.952
6.8	102.9		77	15		147.2	3.217		217.4	0.925
8.6	97.4		78.8	14.36		149	3.105		219.2	0.898
10.4	92.22		80.6	13.74		150.8	2.998		221	0.873
12.2	87.35		82.4	13.16		152.6	2.896		222.8	0.848
14	82.75		84.2	12.6		154.4	2.797		224.6	0.825
15.8	78.43		86	12.07		156.2	2.702		226.4	0.802
17.6	74.35		87.8	11.57		158	2.611		228.2	0.779
19.4	70.5		89.6	11.09		159.8	2.523		230	0.758
21.2	66.88		91.4	10.63		161.6	2.439		231.8	0.737
23	63.46		93.2	10.2		163.4	2.358		233.6	0.717
24.8	60.23		95	9.779		165.2	2.28		235.4	0.697
26.6	57.18		96.8	9.382		167	2.206		237.2	0.678
28.4	54.31		98.6	9.003		168.8	2.133		239	0.66
30.2	51.59		100.4	8.642		170.6	2.064		240.8	0.642
32	49.02		102.2	8.297		172.4	1.997		242.6	0.625
33.8	46.6		104	7.967		174.2	1.933		244.4	0.608
35.6	44.31		105.8	7.653		176	1.871		246.2	0.592
37.4	42.14		107.6	7.352		177.8	1.811		248	0.577
39.2	40.09		109.4	7.065		179.6	1.754		249.8	0.561
41	38.15		111.2	6.791		181.4	1.699		251.6	0.547
42.8	36.32		113	6.529		183.2	1.645		253.4	0.532
44.6	34.58		114.8	6.278		185	1.594		255.2	0.519
46.4	32.94		116.6	6.038		186.8	1.544		257	0.505
48.2	31.38		118.4	5.809		188.6	1.497		258.8	0.492
50	29.9		120.2	5.589		190.4	1.451		260.6	0.48
51.8	28.51		122	5.379		192.2	1.408		262.4	0.467
53.6	27.18		123.8	5.197		194	1.363		264.2	0.456
55.4	25.92		125.6	4.986		195.8	1.322		266	0.444
57.2	24.73		127.4	4.802		197.6	1.282		267.8	0.433
59	23.6		129.2	4.625		199.4	1.244		269.6	0.422
60.8	22.53		131	4.456		201.2	1.207		271.4	0.412
62.6	21.51		132.8	4.294		203	1.171		273.2	0.401
64.4	20.54		134.6	4.139		204.8	1.136		275	0.391
66.2	19.63		136.4	3.99		206.6	1.103		276.8	0.382

Resistance Table of Tube Temperature Sensors for Indoor and Outdoor (20K)

Temp.(°F)	Resistance(kΩ)		Temp.(°F)	Resistance(kΩ)		Temp.(°F)	Resistance(kΩ)		Temp.(°F)	Resistance(kΩ)
-2.2	181.4		68	25.01		138.2	5.13		208.4	1.427
-0.4	171.4		69.8	23.9		140	4.948		210.2	1.386
1.4	162.1		71.6	22.85		141.8	4.773		212	1.346
3.2	153.3		73.4	21.85		143.6	4.605		213.8	1.307
5	145		75.2	20.9		145.4	4.443		215.6	1.269
6.8	137.2		77	20		147.2	4.289		217.4	1.233
8.6	129.9		78.8	19.14		149	4.14		219.2	1.198
10.4	123		80.6	18.13		150.8	3.998		221	1.164
12.2	116.5		82.4	17.55		152.6	3.861		222.8	1.131
14	110.3		84.2	16.8		154.4	3.729		224.6	1.099
15.8	104.6		86	16.1		156.2	3.603		226.4	1.069
17.6	99.13		87.8	15.43		158	3.481		228.2	1.039
19.4	94		89.6	14.79		159.8	3.364		230	1.01
21.2	89.17		91.4	14.18		161.6	3.252		231.8	0.983
23	84.61		93.2	13.59		163.4	3.144		233.6	0.956
24.8	80.31		95	13.04		165.2	3.04		235.4	0.93
26.6	76.24		96.8	12.51		167	2.94		237.2	0.904
28.4	72.41		98.6	12		168.8	2.844		239	0.88
30.2	68.79		100.4	11.52		170.6	2.752		240.8	0.856
32	65.37		102.2	11.06		172.4	2.663		242.6	0.833
33.8	62.13		104	10.62		174.2	2.577		244.4	0.811
35.6	59.08		105.8	10.2		176	2.495		246.2	0.77
37.4	56.19		107.6	9.803		177.8	2.415		248	0.769
39.2	53.46		109.4	9.42		179.6	2.339		249.8	0.746
41	50.87		111.2	9.054		181.4	2.265		251.6	0.729
42.8	48.42		113	8.705		183.2	2.194		253.4	0.71
44.6	46.11		114.8	8.37		185	2.125		255.2	0.692
46.4	43.92		116.6	8.051		186.8	2.059		257	0.674
48.2	41.84		118.4	7.745		188.6	1.996		258.8	0.658
50	39.87		120.2	7.453		190.4	1.934		260.6	0.64
51.8	38.01		122	7.173		192.2	1.875		262.4	0.623
53.6	36.24		123.8	6.905		194	1.818		264.2	0.607
55.4	34.57		125.6	6.648		195.8	1.736		266	0.592
57.2	32.98		127.4	6.403		197.6	1.71		267.8	0.577
59	31.47		129.2	6.167		199.4	1.658		269.6	0.563
60.8	30.04		131	5.942		201.2	1.609		271.4	0.549
62.6	28.68		132.8	5.726		203	1.561		273.2	0.535
64.4	27.39		134.6	5.519		204.8	1.515		275	0.521
66.2	26.17		136.4	5.32		206.6	1.47		276.8	0.509

Resistance Table of Discharge Temperature Sensor for Outdoor(50K)

Temp.(°F)	Resistance(kΩ)		Temp.(°F)	Resistance(kΩ)		Temp.(°F)	Resistance(kΩ)		Temp.(°F)	Resistance(kΩ)
-20.2	853.5		50	98		120.2	18.34		190.4	4.754
-18.4	799.8		51.8	93.42		122	17.65		192.2	4.609
-16.6	750		53.6	89.07		123.8	16.99		194	4.469
-14.8	703.8		55.4	84.95		125.6	16.36		195.8	4.334
-13	660.8		57.2	81.05		127.4	15.75		197.6	4.204
-11.2	620.8		59	77.35		129.2	15.17		199.4	4.079
-9.4	580.6		60.8	73.83		131	14.62		201.2	3.958
-7.6	548.9		62.6	70.5		132.8	14.09		203	3.841
-5.8	516.6		64.4	67.34		134.6	13.58		204.8	3.728
-4	486.5		66.2	64.33		136.4	13.09		206.6	3.619
-2.2	458.3		68	61.48		138.2	12.62		208.4	3.514
-0.4	432		69.8	58.77		140	12.17		210.2	3.413
1.4	407.4		71.6	56.19		141.8	11.74		212	3.315
3.2	384.5		73.4	53.74		143.6	11.32		213.8	3.22
5	362.9		75.2	51.41		145.4	10.93		215.6	3.129
6.8	342.8		77	49.19		147.2	10.54		217.4	3.04
8.6	323.9		78.8	47.08		149	10.18		219.2	2.955
10.4	306.2		80.6	45.07		150.8	9.827		221	2.872
12.2	289.6		82.4	43.16		152.6	9.489		222.8	2.792
14	274		84.2	41.34		154.4	9.165		224.6	2.715
15.8	259.3		86	39.61		156.2	8.854		226.4	2.64
17.6	245.6		87.8	37.96		158	8.555		228.2	2.568
19.4	232.6		89.6	36.38		159.8	8.268		230	2.498
21.2	220.5		91.4	34.88		161.6	7.991		231.8	2.431
23	209		93.2	33.45		163.4	7.726		233.6	2.365
24.8	198.3		95	32.09		165.2	7.47		235.4	2.302
26.6	199.1		96.8	30.79		167	7.224		237.2	2.241
28.4	178.5		98.6	29.54		168.8	6.998		239	2.182
30.2	169.5		100.4	28.36		170.6	6.761		240.8	2.124
32	161		102.2	27.23		172.4	6.542		242.6	2.069
33.8	153		104	26.15		174.2	6.331		244.4	2.015
35.6	145.4		105.8	25.11		176	6.129		246.2	1.963
37.4	138.3		107.6	24.13		177.8	5.933		248	1.912
39.2	131.5		109.4	23.19		179.6	5.746		249.8	1.863
41	125.1		111.2	22.29		181.4	5.565		251.6	1.816
42.8	119.1		113	21.43		183.2	5.39		253.4	1.77
44.6	113.4		114.8	20.6		185	5.222		255.2	1.725
46.4	108		116.6	19.81		186.8	5.06		257	1.682
48.2	102.8		118.4	19.06		188.6	4.904		258.8	1.64

Product improvement, specifications and appearance in this manual are subject to change without prior notice.

© Johnson Controls, Inc. USA

LIT - 12012191